October 2009

Your Reliable Power Partner

ISO-9001 Switching Power Supply Manufacturer

MEAN WELL

www.meanwell.com

Taiwan

明緯企業股份有限公司
MEAN WELL ENTERPRISES CO., LTD.
台北縣五股工業區五權三路28號
No.28, Wu-Chuan 3rd Road,
Wu Ku Ind. Park, Taipei County, Taiwan, 248
Tel :+886-2-2299-6100(rep.)
Fax:+886-2-2299-6200(rep.)
+886-2-2298-0818(sales)
E-mail:info@meanwell.com
http://www.meanwell.com

China

廣州銘緯電子產品有限公司
GUANGZHOU MEAN WELL ELECTRONICS CO., LTD.
廣州市天河區東圃鎮黃村大道粵安工業園A棟2樓
2nd Floor, No.A Building, Yuean Ind. Park,
Dongpu Town, Tianhe District, Guangzhou, China
Tel :+86-20-2887-1200
Fax:+86-20-8201-0507
E-mail:info@meanwell.com.cn
http://www.meanwell.com.cn

China

蘇州明緯科技有限公司
SUZHOU MEAN WELL TECHNOLOGY CO., LTD.
江蘇省蘇州市相城區黃埭鎮潘陽工業園東橋健民路77號
No.77, Jian-Ming Rd. Dong-Qiao,
Pan-Yang Ind. Park, Huang-Dai Town,
Xiang-Cheng District, Suzhou, Jiang-Su, China
Tel :+86-512-6508-8600
Fax:+86-512-6508-8700
E-mail:info@meanwell.cc
http://www.meanwell.cc

U.S.A.

MEAN WELL USA, INC.
44030 Fremont Blvd., Fremont,
CA 94538, U.S.A.
Tel :+1-510-683-8886
Fax:+1-510-683-8899
E-mail:info@meanwellusa.com
http://www.meanwellusa.com

Europe

MEAN WELL EUROPE B.V.
Spinnerij 73-75, 1185 ZS Amstelveen,
the Netherlands
Tel :+31-20-345-3795
Fax:+31-20-640-3547
E-mail:info@meanwell.eu
http://www.meanwell.eu

Please Contact Your Local Distributor

Introduction

Feature Products for 2009

To comply with the global trend of energy saving, MEAN WELL invests resources to develop new generation of switching power supplies imbued with green concept. From LED power supply, green adaptor, solar inverter, to high efficiency AC/DC power supplies, we are looking for higher in efficiency, lower in no load power consumption, smaller in size, and in compliance with the latest regulations all over the world.

▸ LED Power Supply

HLG, CLG, PLN, PLC, CEN, ELN, LP, ULP and PLP families form a complete group of LED / outdoor power solution. Ranging from 18W to 240W, with or without PFC, and comply with specific norms (UL1310, EN61347) for LED related applications.

▸ Slim DIN Rail Power

The new slim SDR series significantly reduce the size by 40%+ and possess up to 94% of extreme high efficiency. Relay contact style alarm signal, GL and SEMI F47 compliance are the specialties

▸ Green Adaptor

Ranging from 12~220W and with low no load power consumption, the green adaptor series comply with EISA 2007, EuP and Energy Star level IV or V.

▸ Solar Inverter

Consolidating with solar panels, TN series can construct an independent solar power system to save the precious energy.

▸ High Wattage Power Supply

High power has been asked frequently for moving sign, communication, and heavy machinery applications. MEAN WELL can offer 3KW single unit and up to 9KW by parallel connection.

MEAN WELL offers you an opportunity to get the free custom-standard design. Among our under development products, you are welcome to join the design procedure and let the new product fulfill your special requirement. No NRE charge, no safety costs, just contact us in time!!

INDEX

■Enclosed Switching Power Supply

G3 Series	RS-15 / 25 / 35 / 50 / 75 / 100 / 150	2~3
	RD-35 / 50 / 65 / 85 / 125	
	RID-50 / 65 / 85 / 125, RT-50 / 65 / 85 / 125	
	RQ-50 / 65 / 85 / 125	
NE Series	NES-15 / 25 / 35 / 50 / 75 / 100 / 150	4~5
	NED-35 / 50 / 75 / 100, NET-35 / 50 / 75	
	NES-200, NES-350	
SE Series	SE-200, SE-350, SE-450	6
	SE-600, SE-1000, SE-1500 *QP-1000*	7
G2 Series	S-25, S-40, S-60, S-100F, S-150	8
	S-210, S-250, S-320 *SP-400*	9
	D / ID / T / IT-60, Q / IQ-60	10
	D / T / Q-120, Q-250, T-40	11
PFC Series	SP-75, SP-100, SP-150, SP-200, SP-240	12
	SP-320, SP-480, SP-500, SP-750	13
	PSP-500, PSP-600, RSP-1000, RSP-1500	14
	RSP-2400, RSP-3000, TP-75, QP-320	15
	TP-100, QP-100, TP-150, QP-150	16
	QP-200, QP-375	17
	HRP-75, HRP-100, HRP G-150, HRP G-200	18
	HRP G-300 / 450 / 600	19
	SPV-150, SPV-300, SPV-1500 *SPV-600*	20
U-bracket	USP-150, USP-225, USP-350, USP-500	21
DIN Series	MDR-10 / 20 / 40 / 60 / 100	22
	DR-15, DR-30, DR-60, DR-100	23
	DR-45, DR-75, DR-120,	24
	DRP-240, DRP-480, DRP-480S	
	DRH-120, DRT-240, DRT-480, DRT-960	25
	WDR-120, WDR-240, WDR-480 *NED-35*	26
	SDR-120, SDR-240, SDR-480 P	27
	DR-RDN20, DR-UPS40	28
LED Series	LPL-18, LPH-18, LPV-20, LPV-35, LPV-60	29
	LPHC-18, LPLC-18, LPC-20 / 35 / 60	30
	ELN-30, ELN-60	31
	PLN-20, PLN-30, PLN-45, PLN-60, PLN-100	32
	PLC-30, PLC-45, PLC-60, PLC-100	33
	CEN-60, CEN-75, CEN-100, ULP-150	34
	CLG-60, CLG-100, CLG-150 *Waterproof Connector*	35
	HLG-100 / 120 / 150 / 185 / 240	36
	PLP-20, PLP-30, PLP-45, PLP-60	37
19" Rack Power	RCP-MU, RCP-1000, RCP-1U	38
	RCP-2U *ARCP Series*	39
Modular Series	MP450, MP650, MP1K0	40~41
	MS-75 / 150 / 300, MD-100	

■Open Frame Switching Power Supply

Medical Type	PM-05, PM-10, PM-15, PM-20	42
	NFM-05, NFM-10, NFM-15, NFM-20	43
	MPS-30, MPS / D / T-45 *PAD-100*	44
	RPS / D / T-60, MPS / D / T-65	45
	RPS / D / T-75, RPS / D / T-160	46
	MPS / D / T / Q-120, MPS / D / T / Q-200	47
General Type	PS-05, PS-15, PS-25, PD-25	48
	PS-35, ELP-75, PS-45, PD-45, PT-45	49
	PT-4503, PT-6503, PS-65, PD-65, PT-65	50
	RPD-65, RPT-65, PD-110, PQ-100	51
	PPQ-100, PPS / PPT-125	52
	ASP-150, PPS-200, PID-250	53
General Type	LPS-50, LPS-75, LPS-100, LPP-100	54
	LPP-150	

■External Switching Power Supply

Charger	PA-120, PB-120, PS-120	55
	PB-230, PB-300, PB-360, PB-600	56
	PB-1000, ESC / P-120, ESC / P-240 *ADD-300*	57
	GC30B / U / E, GC120, GC160, GC220	58
Adaptor	GS06U / E, GS12U / E, GS15A / B / U / E	59
	GS18A / B / U / E, GS25A / B / U / E	60
	GE12, GE18, GE24	61
	ES18A / B / C, ES25A / B / C	62
	ES18U / E, ES25U / E	63
	P25A / B, P50A *DC Plug List*	64
	MES30A / B / C, MES50A	65
	GS40, GS60, GS90, GS120	66
	FM90C, AS-120P, GS160, GS220	67

■Specific Purpose Power Supply

Security Series	ADS-55 / 155, AD-55 / 155, ADD-55 / 155	68
	PSC-60, PSC-100	69
Video Game	MWP-602, MWP-602A, MWP-606	69
	MWP-606A, MWP-608	
ATX Power	ATX-100, IPC-200, IPC-250, IPC-300	70
	YP-350A, YP-400A, YP-450A, YP-350J	

■DC/DC Converter

Module Type	SRS, SUS01	71
	SBT01, SFT01, DET01	72
	SPR01, SMU01, SMA01	73
	SPU02, SPA02, SPB03	74
	SCW03, DCW03, SCW05, DCW05	75
	SLW05, DLW05, SCW08, DCW08	76
	SKE10, DKE10, SCW12, DCW12	77
	SKA15, DKA15, SKE15, DKE15	78
	DKA30, TKA30, SDM30	79
On Board Type	NSD05, NSD10-S, NSD10-D	80
	NSD15-S, NSD15-D, NID30, NID60	81
PCB Type	PSD-05, PSD-15, PSD-30, PSD-45	82
Enclosed Type	SD-15, SD-25, SD-50 *PSC-40*	83
	SD-100, SD-150, SD-200, SD-350	84
	SD-500, SD-1000 *HLG-300(H)*	85

■DC/AC Power Inverter

Modified Sine Wave	A301-100 / 150 / 300 / 600 / 1K0 / 1K7 / 2K5	86
	A302-100 / 150 / 300 / 600 / 1K0 / 1K7 / 2K5	
True Sine Wave	TS-200, TS-400, TS-700	87
	TS-1000, TS-1500, TS-2200, TS-3000	88
	TN-1500, TN-2200, TN-3000	89

■Accessories / Case Drawing

Case Drawing	Case 901 / 902 / 903 / 905 / 906 / 907	90
	Case 910/912(B)/915A/916(A/B)/919/920A	91
	Case 926 / 927 / 928 / 929 / 931 / 932	92
	Case 935 / 939 / 940 / 941 / 943 / 946A	93
	Case 952B / 963 / 971A / 986 / 987A / 988A	94
Accessories	DRL-01 / 02 / 03, DRP-01 / 02 / 03	95
	MHS012 / 013 / 014 / 025 / 026	
	TBC05 / 07 / 08	
Custom- Standard Product List	PAD-100, PT-320, SP-400, SPV-600	96
	QP-1000	

: New Announced
: New Product within 1 Year
: Under Development
: Available by Request
: Supplementary Information

Enclosed-G3 Series

High Reliability Miniature

RS-150 RD/ID/T/Q-125 | RS-100 RD/ID/T/Q-85 | RS-75 RD/ID/T/Q-65 | RS-50 RD/ID/T/Q-50 | RS-35 RD-35 | RS-25 | RS-15

Features

- All using 105°C long life electrolytic capacitors
- Protections: Short circuit / Overload / Over voltage
- Meet EMS EN50082-2/EN61000-6-2 heavy industry level (35~150W)
- Withstand 300VAC surge input for 5 sec.
- High operating temperature up to 70°C
- Withstand 5G vibration test
- Miniature size, high power density
- High efficiency, long life and high reliability
- 100% full load burn-in test
- Suitable for critical applications
- 3 years warranty

General Specification (Please refer to www.meanwell.com for detail spec.)

Model No.	RS-15	RS-25	RS-35 RD-35	RS-50 RD / ID / T / Q-50	RS-75 RD / ID / T / Q-65	RS-100 RD / ID / T / Q-85	RS-150 RD / ID / T / Q-125
AC input voltage range	88~264VAC, 124~370VDC						115 / 230VAC by switch
AC inrush current (max.)	Cold start, 65A at 230VAC	Cold start, 40A at 230VAC					50A at 230VAC
DC adjustment range	±10% by potential meter for single output; CH1 -5%~+10% by potential meter for multiple output						
Overload protection	>105%, hiccup mode	110%~180%	110%~150% hiccup mode, auto-recovery (150% ~190% for RID-125-1205/2405)				
Over voltage protection	115%~135%, Shut off	115%~135% rated output voltage, hiccup mode, auto-recovery					
Withstand voltage	I/P - O/P: 3kVAC, I/P - FG: 1.5kVAC, O/P - FG: 0.5kVAC, 1 minute						
Working temperature	-20°C~+70°C (refer to the derating curve for different models)						
Vibration	10~500Hz, 5G 10min/1 cycle, period for 60 min each along X, Y, Z axes						
Safety standards	UL60950-1, TUV EN60950-1 approved						
EMC standards	EN55022 class B, EN61000-3-2,3, EN61000-4-2,3,4,5,6,8,11, ENV50204, EN61000-6-2 (EN50082-2) (35~150W)						
Connection	Terminal block for input and output						
Dimension (LxWxH)(mm)	62.5x 51x 28	78x 51x 28	99x 82x 35	99x 97x 36	129x 98x 38	159x 97x 38	199x 98x 38
Case No.	971A	931	932	905	903	901	902
Packing	108pcs /15.0kg	60pcs /13.0kg	45pcs /14.0kg	45pcs /19.5kg	30pcs /14.2kg	24pcs /15.4kg	20pcs /15.4kg

15W — Single Output

Model No.	Output	Tol.	R&N	Effi.
RS-15-3.3	3.3V, 0~3.0A	±3%	80mV	72%
RS-15-5	5V, 0~3.0A	±2%	80mV	77%
RS-15-12	12V, 0~1.3A	±1%	120mV	81%
RS-15-15	15V, 0~1.0A	±1%	120mV	81%
RS-15-24	24V, 0~0.625A	±1%	200mV	82%
RS-15-48	48V, 0~0.313A	±1%	200mV	82%

25W — Single Output

Model No.	Output	Tol.	R&N	Effi.
RS-25-3.3	3.3V, 0~6.0A	±3%	80mV	72%
RS-25-5	5V, 0~5.0A	±2%	80mV	77%
RS-25-12	12V, 0~2.1A	±1%	120mV	79%
RS-25-15	15V, 0~1.7A	±1%	120mV	82%
RS-25-24	24V, 0~1.1A	±1%	120mV	84%
RS-25-48	48V, 0~0.57A	±1%	200mV	85%

35W — Single Output

Model No.	Output	Tol.	R&N	Effi.
RS-35-3.3	3.3V, 0~7.0A	±3%	80mV	73%
RS-35-5	5V, 0~7.0A	±2%	80mV	77%
RS-35-12	12V, 0~3.0A	±1%	120mV	81%
RS-35-15	15V, 0~2.4A	±1%	120mV	83%
RS-35-24	24V, 0~1.5A	±1%	120mV	84%
RS-35-48	48V, 0~0.8A	±1%	200mV	84%

50W — Single Output

Model No.	Output	Tol.	R&N	Effi.
RS-50-3.3	3.3V, 0~10A	±3%	80mV	72%
RS-50-5	5V, 0~10A	±2%	80mV	78%
RS-50-12	12V, 0~4.2A	±1%	120mV	81%
RS-50-15	15V, 0~3.4A	±1%	120mV	83%
RS-50-24	24V, 0~2.2A	±1%	120mV	84%
RS-50-48	48V, 0~1.1A	±1%	200mV	86%

75W — Single Output

Model No.	Output	Tol.	R&N	Effi.
RS-75-3.3	3.3V, 0~15A	±3%	80mV	71%
RS-75-5	5V, 0~12A	±2%	80mV	76%
RS-75-12	12V, 0~6.0A	±1%	120mV	81%
RS-75-15	15V, 0~5.0A	±1%	120mV	82%
RS-75-24	24V, 0~3.2A	±1%	120mV	85%
RS-75-48	48V, 0~1.6A	±1%	200mV	86%

100W — Single Output

Model No.	Output	Tol.	R&N	Effi.
RS-100-3.3	3.3V, 0~20A	±3%	80mV	74%
RS-100-5	5V, 0~16A	±2%	80mV	77%
RS-100-12	12V, 0~8.5A	±1%	120mV	81%
RS-100-15	15V, 0~7.0A	±1%	120mV	82%
RS-100-24	24V, 0~4.5A	±1%	120mV	84%
RS-100-48	48V, 0~2.3A	±1%	200mV	84%

150W — Single Output

Model No.	Output	Tol.	R&N	Effi.
RS-150-3.3	3.3V, 0~30A	±3%	80mV	74%
RS-150-5	5V, 0~26A	±2%	80mV	78%
RS-150-12	12V, 0~12.5A	±1%	120mV	83%
RS-150-15	15V, 0~10A	±1%	120mV	84%
RS-150-24	24V, 0~6.5A	±1%	120mV	86%
RS-150-48	48V, 0~3.3A	±1%	200mV	87%

Enclosed-G3 Series

35W — Dual Output

Model No.	Output	Tol.	R&N	Effi.	Max.
RD-35A	5V, 0.3~4.0A	±2%	80mV	72%	32W
	12V, 0.2~1.0A	±6%	120mV	77%	
RD-35B	5V, 0.3~4.0A	±2%	80mV	79%	35W
	24V, 0.2~1.3A	±5%	120mV	82%	
RD-3513	13.5V, 0.3~2.0A	±4%	120mV	84%	35W
	-13.5V, 0.2~0.57A	±4%	120mV	85%	

50W — Dual Output (Output isolated for RID-50A/B)

Model No.	Output	Tol.	R&N	Effi.	Max.
RD-50A	5V, 0.3~6.0A	±2%	80mV	79%	54W
	12V, 0.3~3.0A	±7%	120mV		
RD-50B	5V, 0.3~6.0A	±2%	80mV	80%	54W
	24V, 0.2~2.0A	+8%, -4%	120mV		

65W — Dual Output (Output isolated for RID-65A/B)

Model No.	Output	Tol.	R&N	Effi.	Max.
RD-65A	5V, 0.3~8.0A	±2%	80mV	79%	66W
	12V, 0.2~4.0A	±6%	120mV		
RD-65B	5V, 0.3~8.0A	±2%	80mV	78%	68W
	24V, 0.2~3.0A	+4%, -6%	150mV		

85W — Dual Output (Output isolated for RID-85A/B)

Model No.	Output	Tol.	R&N	Effi.	Max.
RD-85A	5V, 2.0~10A	±2%	80mV	78%	88W
	12V, 0.3~5.0A	±5%	120mV		
RD-85B	5V, 2.0~10A	±2%	80mV	80%	88W
	24V, 0.3~2.5A	±5%	150mV		

125W — Dual Output

Model No.	Output	Tol.	R&N	Effi.	Max.
RD-125A	5V, 2.0~15A	±5%	80mV	82%	131W
	12V, 0.5~10A	±7%	120mV		
RD-125B	5V, 2.0~10A	±5%	80mV	85%	133W
	24V, 0.4~5.0A	±7%	150mV		

125W — Dual Output (Output isolated for RID-125)

Model No.	Output	Tol.	R&N	Effi.	Max.
RD-125-1224	12V, 1.0~7.0A	±2%	120mV	85%	133W
	24V, 0.4~5.0A	+8%, -5%	200mV		
*RD-125-2412	24V, 0.5~5.0A	±2%	200mV	85%	133W
	12V, 1.0~7.0A	±10%	120mV		
RD-125-1248	12V, 1.0~7.0A	±2%	120mV	85%	138W
	48V, 0.2~2.5A	+8%, -5%	240mV		
*RD-125-4812	48V, 0.3~2.5A	±2%	240mV	85%	138W
	12V, 1.0~7.0A	±10%	120mV		
RD-125-2448	24V, 0.5~4.0A	±1%	200mV	86%	144W
	48V, 0.2~2.5A	±4%	240mV		
*RD-125-4824	48V, 0.3~2.5A	±1%	240mV	86%	144W
	24V, 0.5~4.0A	±8%	240mV		
RID-125-1205	12V, 2.0~10.5A	±2%	120mV	80%	125W
	5V, 0.0~3.0A	±3%	80mV		
RID-125-2405	24V, 2.0~5.3A	±2%	120mV	83%	125W
	5V, 0.0~3.0A	±3%	80mV		

*Modified

50W — Quad Output (RT-50 without -5V or -12V output)

Model No.	Output	Tol.	R&N	Effi.	Max.
RQ-50B	5V, 0.5~6.0A	±2%	80mV	74%	46W
	12V, 0.2~1.5A	±6%	120mV		
	-5V, 0.0~1.0A	±2%	100mV		
	-12V, 0.0~1.0A	±2%	80mV		
RQ-50C	5V, 0.5~6.0A	±2%	80mV	75%	50W
	15V, 0.2~1.5A	±6%	120mV		
	-5V, 0.0~1.0A	±2%	100mV		
	-15V, 0.0~1.0A	±2%	80mV		
RQ-50D	5V, 0.5~6.0A	±6%	80mV	79%	53W
	12V, 0.2~1.5A	±6%	120mV		
	24V, 0.1~1.0A	+7%, -5%	180mV		
	-12V, 0.0~1.0A	±2%	80mV		

65W — Quad Output (RT-65 without -5V or -12V output)

Model No.	Output	Tol.	R&N	Effi.	Max.
RQ-65B	5V, 0.5~8.0A	±2%	80mV	76%	63W
	12V, 0.2~3.0A	+7%, -5%	120mV		
	-5V, 0.0~1.0A	±5%	80mV		
	-12V, 0.0~1.0A	±5%	80mV		
RQ-65C	5V, 0.5~8.0A	±2%	80mV	76%	65W
	15V, 0.2~3.0A	+8%, -4%	120mV		
	-5V, 0.0~1.0A	±5%	80mV		
	-15V, 0.0~1.0A	±5%	80mV		
RQ-65D	5V, 0.5~8.0A	±2%	80mV	78%	68W
	12V, 0.2~3.0A	±6%	120mV		
	24V, 0.1~1.5A	±8%	180mV		
	-12V, 0.0~1.0A	±5%	80mV		

85W — Quad Output (RT-85 without -5V or -12V output)

Model No.	Output	Tol.	R&N	Effi.	Max.
RQ-85B	5V, 2.0~10A	±2%	80mV	76%	81W
	12V, 0.3~4.0A	+7%, -3%	120mV		
	-5V, 0.0~1.0A	±8%	100mV		
	-12V, 0.0~1.0A	±5%	80mV		
RQ-85C	5V, 2.0~10A	±2%	80mV	77%	83W
	15V, 0.3~4.0A	+3%, -7%	120mV		
	-5V, 0.0~1.0A	±8%	100mV		
	-15V, 0.0~1.0A	±5%	80mV		
RQ-85D	5V, 2.0~10A	±2%	80mV	78%	84W
	12V, 0.3~4.0A	+7%, -3%	120mV		
	24V, 0.1~1.5A	±8%	150mV		
	-12V, 0.0~1.0A	±5%	80mV		

125W — Quad Output (RT-125 without -5V or -12V output)

Model No.	Output	Tol.	R&N	Effi.	Max.
RQ-125B	5V, 2.0~12A	±2%	80mV	79%	120W
	12V, 0.5~4.5A	+8%, -3%	120mV		
	-5V, 0.1~1.0A	+6%, -10%	80mV		
	-12V, 0.0~1.0A	±5%	80mV		
RQ-125C	5V, 2.0~12A	±2%	80mV	80%	123W
	15V, 0.5~4.0A	+8%, -3%	120mV		
	-5V, 0.1~1.0A	+6%, -10%	80mV		
	-15V, 0.0~1.0A	±5%	80mV		
RQ-125D	5V, 2.0~12A	±2%	80mV	82%	124W
	12V, 0.5~4.0A	+8%, -3%	120mV		
	24V, 0.1~2.5A	±8%	150mV		
	-12V, 0.0~1.0A	±5%	80mV		

Enclosed-NE Series

15~350W Miniature

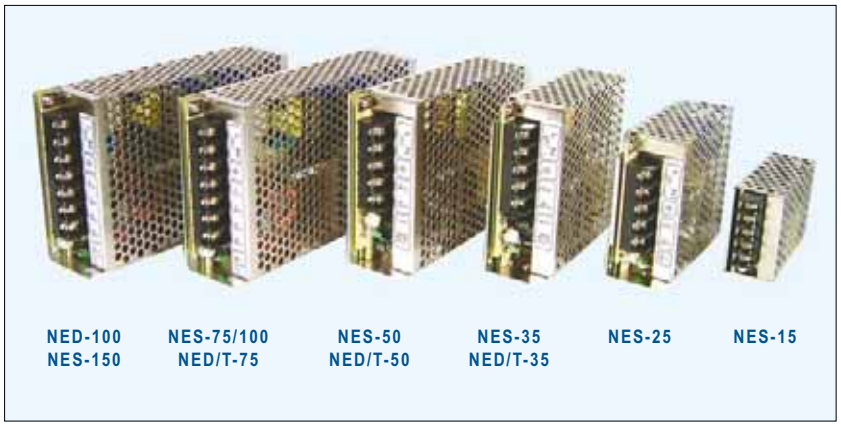

Features

- Universal AC input / Full range (NES/D-100, NES-150 AC input selectable by switch)
- Protections: Short circuit / Overload / Over voltage
- Built-in over temperature protection for NES-15
- Cooling by free air convection
- Small size, high power density
- Low cost, high reliability
- 100% full load burn-in test
- Most economical low wattage solution with safety certificates
- 2 years warranty

General Specification (Please refer to www.meanwell.com for detail spec.)

Model No.	NES-15	NES-25	NES-35 NED/T-35	NES-50 NED/T-50	NES-75 NED/T-75	NES-100	NES-150 NED-100
AC input voltage range	85~264VAC, 120 ~ 370VDC					115/230VAC by switch	
AC inrush current (max.)	Cold start, 45A at 230VAC						
DC adjustment range	±10% by potential meter for single output; CH1 -5~+10% by potential meter for multiple output					-5% ~ +10% (NES-100/150) CH1 -5% ~ +10% (NED-100)	
Overload protection	>105%	110%~150% hiccup mode, auto-recovery					
Over voltage protection	115%~135% rated output voltage, shut off					115%~135% hiccup mode, auto-recovery	
Withstand voltage	I/P - O/P: 3kVAC, I/P - FG: 1.5kVAC, O/P - FG: 0.5kVAC, 1 minute						
Working temperature	-20 ~ +60°C (refer to the derating curve for different models)						
Vibration	10~500Hz, 2G 10min/1 cycle, period for 60 min each along X, Y, Z axes						
Safety standards	UL60950-1, GB4943(NES only) approved, also design refer to TUV EN60950-1						
EMC standards	EN55022 class B, EN61000-3-2,3, EN61000-4-2,3,4,5,6,8,11, ENV50204, GB9254(NES only)						
Connection	Terminal block for input and output						
Dimension (LxWxH)(mm)	78x 51x 28	99x 82x 35	99x 97x 36	129x 98x 38	159x 97x 38	159x 97x 38	199x 98x 38
Case No.	931A	932B	905	903	901	901	902
Packing	60pcs/11.8kg	45pcs/14.5kg	45pcs/17.2kg	45pcs/19.5kg	30pcs/16.6kg	30pcs/17.5kg	30pcs/22kg

15W — Single Output

Model No.	Output	Tol.	R&N	Effi.
NES-15-5	5V, 0~3.0A	±2%	150mV	79%
NES-15-12	12V, 0~1.3A	±1%	150mV	81%
NES-15-15	15V, 0~1.0A	±1%	150mV	81%
NES-15-24	24V, 0~0.7A	±1%	200mV	85%
NES-15-48	48V, 0~0.35A	±1%	240mV	82%

25W — Single Output

Model No.	Output	Tol.	R&N	Effi.
NES-25-5	5V, 0~5.0A	±2%	80mV	78%
NES-25-12	12V, 0~2.1A	±1%	120mV	83%
NES-25-15	15V, 0~1.7A	±1%	150mV	84%
NES-25-24	24V, 0~1.1A	±1%	200mV	86%
NES-25-48	48V, 0~0.57A	±1%	240mV	86%

35W — Single Output

Model No.	Output	Tol.	R&N	Effi.
NES-35-5	5V, 0~7.0A	±2%	80mV	78%
NES-35-12	12V, 0~3.0A	±1%	120mV	81%
NES-35-15	15V, 0~2.4A	±1%	150mV	83%
NES-35-24	24V, 0~1.5A	±1%	200mV	85%
NES-35-48	48V, 0~0.8A	±1%	240mV	86%

50W — Single Output

Model No.	Output	Tol.	R&N	Effi.
NES-50-5	5V, 0~10A	±2%	80mV	79%
NES-50-12	12V, 0~4.2A	±1%	120mV	82%
NES-50-15	15V, 0~3.4A	±1%	150mV	83%
NES-50-24	24V, 0~2.2A	±1%	200mV	86%
NES-50-48	48V, 0~1.1A	±1%	240mV	87%

75W — Single Output

Model No.	Output	Tol.	R&N	Effi.
NES-75-5	5V, 0~14A	±2%	80mV	77%
NES-75-12	12V, 0~6.2A	±1%	120mV	82%
NES-75-15	15V, 0~5.0A	±1%	150mV	83%
NES-75-24	24V, 0~3.2A	±1%	200mV	86%
NES-75-48	48V, 0~1.6A	±1%	240mV	87%

100W — Single Output

Model No.	Output	Tol.	R&N	Effi.
NES-100-5	5V, 0~20A	±2%	80mV	80%
NES-100-7.5	7.5V, 0~13.6A	±1%	120mV	81%
NES-100-9	9V, 0~11.2A	±1%	120mV	81%
NES-100-12	12V, 0~8.5A	±1%	120mV	83%
NES-100-15	15V, 0~7.0A	±1%	120mV	84%
NES-100-24	24V, 0~4.5A	±1%	120mV	86%
NES-100-48	48V, 0~2.3A	±1%	150mV	86%

150W — Single Output

Model No.	Output	Tol.	R&N	Effi.
NES-150-3.3	3.3V, 0~30A	±3%	80mV	73%
NES-150-5	5V, 0~26A	±2%	80mV	78%
NES-150-7.5	7.5V, 0~20A	±1%	120mV	80%
NES-150-9	9V, 0~16.7A	±1%	120mV	83%
NES-150-12	12V, 0~12.5A	±1%	120mV	83%
NES-150-15	15V, 0~10A	±1%	120mV	83%
NES-150-24	24V, 0~6.5A	±1%	120mV	86%
NES-150-48	48V, 0~3.3A	±1%	200mV	86%

Enclosed-NE Series

35W — Dual Output

Model No.	Output	Tol.	R&N	Effi.	Max.
NED-35A	5V, 0.5~5.0A	±2%	80mV	78%	32W
	12V, 0.1~1.5A	±6%	120mV		
NED-35B	5V, 0.5~4.0A	±2%	80mV	81%	35W
	24V, 0.2~1.3A	±6%	200mV		

50W — Dual Output

Model No.	Output	Tol.	R&N	Effi.	Max.
NED-50A	5V, 1.0~6.0A	±2%	80mV	79%	54W
	12V, 0.3~3.0A	±6%	120mV		
NED-50B	5V, 1.0~6.0A	±2%	80mV	82%	54W
	24V, 0.2~2.0A	±6%	200mV		

75W — Dual Output

Model No.	Output	Tol.	R&N	Effi.	Max.
NED-75A	5V, 1.0~8.0A	±2%	80mV	78%	71W
	12V, 0.3~4.0A	±6%	120mV		
NED-75B	5V, 1.0~6.0A	±2%	80mV	81%	73W
	24V, 0.2~3.0A	±6%	200mV		

100W — Dual Output (Output isolated for NED-100 GD)

Model No.	Output	Tol.	R&N	Effi.	Max.
NED-100A	5V, 2~10A	±2%	80mV	80%	100W
	12V, 0.7~7.0A	±10%	120mV		
NED-100B	5V, 1~10A	±2%	80mV	82%	100W
	24V, 0.3~3.5A	±8%	200mV		
NED-100C	12V, 0~8.0A	±2%	120mV	80%	99W
	5V, 0~3.0A	±3%	80mV		
NED-100D	24V, 0~4.0A	±2%	120mV	82%	99W
	5V, 0~3.0A	±3%	80mV		

35W — Triple Output

Model No.	Output	Tol.	R&N	Effi.	Max.
NET-35A	5V, 0.5~4.0A	±2%	80mV	78%	30W
	12V, 0.1~1.5A	±6%	120mV		
	-5V, 0.1~0.5A	±6%	120mV		
NET-35B	5V, 0.5~4.0A	±2%	80mV	79%	33W
	12V, 0.1~1.5A	±6%	120mV		
	-12V, 0.1~0.5A	±6%	120mV		
NET-35C	5V, 0.5~3.5A	±2%	80mV	79%	35W
	15V, 0.1~1.5A	±8%	150mV		
	-15V, 0.1~0.5A	±8%	150mV		
NET-35D	5V, 0.5~3.5A	±2%	80mV	79%	37W
	24V, 0.1~1.0A	±8%	200mV		
	12V, 0.1~1.0A	±8%	120mV		

50W — Triple Output

Model No.	Output	Tol.	R&N	Effi.	Max.
NET-50A	5V, 0.6~5.0A	±2%	80mV	76%	47W
	12V, 0.2~2.5A	±6%	120mV		
	-5V, 0.1~0.7A	±5%	120mV		
NET-50B	5V, 0.6~5.0A	±2%	80mV	78%	50W
	12V, 0.2~2.5A	±6%	120mV		
	-12V, 0.1~0.7A	±5%	120mV		
NET-50C	5V, 0.6~5.0A	±2%	80mV	78%	50W
	15V, 0.1~2.0A	±8%	150mV		
	-15V, 0.1~0.7A	±5%	150mV		
NET-50D	5V, 0.6~5.0A	±2%	80mV	79%	51W
	24V, 0.1~1.5A	±8%	200mV		
	12V, 0.1~1.5A	±6%	120mV		

75W — Triple Output

Model No.	Output	Tol.	R&N	Effi.	Max.
NET-75A	5V, 0.6~7.0A	±2%	80mV	77%	69W
	12V, 0.2~3.5A	±6%	120mV		
	-5V, 0.1~0.7A	±5%	120mV		
NET-75B	5V, 0.6~7.0A	±2%	80mV	78%	65W
	12V, 0.2~3.5A	±6%	120mV		
	-12V, 0.1~0.7A	±5%	120mV		
NET-75C	5V, 0.6~7.0A	±2%	80mV	78%	72W
	15V, 0.1~3.5A	±8%	150mV		
	-15V, 0.1~0.7A	±5%	150mV		
NET-75D	5V, 0.6~6.0A	±2%	80mV	80%	73W
	24V, 0.1~2.0A	±8%	200mV		
	12V, 0.1~1.5A	±6%	120mV		

200W Single Output Switching Power Supply

UL / CUL pending

- AC input selectable by switch
- Withstand 300VAC surge input for 5 seconds
- Protections: Short circuit / Overload Over voltage / Over temp.
- Cooling by free air convection
- Built-in constant current limiting circuit
- 100% full load burn-in test
- LED indicator for power on
- Low cost, high reliability
- 2 years warranty

AC input voltage range ..... 90~132VAC / 180~264VAC selectable by switch
DC adjustment range ..... ±10% rated output range
Overload protection ..... 105~135% constant current limiting, auto-recovery
Over voltage protection ..... 115%~145% rated output voltage
Setup, rise, hold up time ..... 1000ms, 50ms, 20ms at full load and 230VAC
Withstand voltage ..... I/P - O/P: 3kVAC, I/P-FG: 1.5kVAC, O/P-FG: 0.5kVAC
Working temperature ..... -20ºC~60ºC (refer to output derating curve)
Safety standards ..... Design refer to UL60950-1
EMC standards ..... Design refer to EN55022 class B
Packing ..... 0.93kg ; 12pcs / 12kg / 0.92CUFT

Model No.	Output	Tol.	R&N	Effi.
NES-200-3.3	3.3V, 0~40A	±2%	150mV	75%
NES-200-5	5V, 0~40A	±2%	150mV	79%
NES-200-7.5	7.5V, 0~26.5A	±2%	150mV	82%
NES-200-12	12V, 0~16.5A	±1%	150mV	83%
NES-200-15	15V, 0~13.3A	±1%	150mV	85%
NES-200-24	24V, 0~8.3A	±1%	150mV	87%
NES-200-27	27V, 0~7.4A	±1%	200mV	87%
NES-200-36	36V, 0~5.6A	±1%	240mV	87%
NES-200-48	48V, 0~4.2A	±1%	240mV	88%

350W Single Output Switching Power Supply

UL / CUL pending

- AC input selectable by switch
- Withstand 300VAC surge input for 5 seconds
- Protections: Short circuit / Overload Over voltage / Over temp.
- Forced air cooling by built-in DC fan
- Built-in fan ON/OFF control
- Built-in constant current limiting circuit
- 100% full load burn-in test
- LED indicator for power on
- Low cost, high reliability
- 2 years warranty

AC input voltage range ..... 90~132VAC / 180~264VAC selectable by switch
DC adjustment range ..... ±10% rated output range
Overload protection ..... 105~135% constant current limiting, auto-recovery
Over voltage protection ..... 115%~145% rated output voltage
Setup, rise, hold up time ..... 1000ms, 50ms, 20ms at full load and 230VAC
Withstand voltage ..... I/P - O/P: 3kVAC, I/P-FG: 1.5kVAC, O/P-FG: 0.5kVAC
Working temperature ..... -20ºC~60ºC (refer to output derating curve)
Safety standards ..... Design refer to UL60950-1
EMC standards ..... Design refer to EN55022 class B
Packing ..... 1.07kg ; 12pcs / 13.5kg / 0.92CUFT

Model No.	Output	Tol.	R&N	Effi.
NES-350-3.3	3.3V, 0~60A	±2%	150mV	75%
NES-350-5	5V, 0~60A	±2%	150mV	79%
NES-350-7.5	7.5V, 0~46A	±2%	150mV	82%
NES-350-12	12V, 0~29A	±1%	150mV	83%
NES-350-15	15V, 0~23.2A	±1%	150mV	85%
NES-350-24	24V, 0~14.6A	±1%	150mV	87%
NES-350-27	27V, 0~13A	±1%	200mV	87%
NES-350-36	36V, 0~9.7A	±1%	240mV	87%
NES-350-48	48V, 0~7.3A	±1%	240mV	88%

Enclosed-SE Series 200~450W Single Output

Features

- AC input selectable by switch
- Withstand 300VAC surge input for 5 seconds (except for SE-450)
- Protections: Short circuit / Overload / Over voltage / Over temperature
- Forced air cooling by built-in DC fan (SE-350/450)
- Built-in fan ON-OFF control (SE-350)
- Built-in constant current limiting circuit (SE-200/350)
- Built-in remote sense function (SE-450)
- 100% full load burn-in test
- LED indicator for power on
- 2 years warranty

General Specification (Please refer to www.meanwell.com for detail spec.)

c UL us (SE-200/350 pending)

Model No.		SE-200 Under Development	SE-350 Under Development	SE-450 NEW
AC input voltage range		90~132VAC / 180~264VAC selected by switch		
AC inrush current (max.)		Cold start, 55A at 230VAC		
DC adjustment range		±10% rated Output voltage		
Overload Protection	Range	105% ~135%		105% ~150%
	Type	Constant current limiting, auto-recovery		Shut down o/p voltage, re-power on to recover
Over voltage protection		115%~145%		
Withstand voltage		I/P - O/P: 3kVAC, I/P - FG: 1.5kVAC, O/P-FG: 0.5kVAC		
Working temperature		-20~+60°C (refer to output derating curve)		-10~+60°C (refer to output derating curve)
Safety standards		Design refer to UL60950-1		UL60950-1 approved
EMC standards		Design refer to EN55022 class B		
Connection		9P/9.5mm pitch terminal block with cover		9P/11mm pitch terminal block with cover
Dimension (LxWxH)(mm)		215x 115x 50		225x 124x 50
Case No.		912	912C	986
Packing		12pcs / 12kg	12pcs / 13.5kg	12pcs / 16kg

200W — Under Development — SE-200

Model No.	Output	Tol.	R&N	Effi.
SE-200-3.3	3.3V, 0~40A	±2%	150mV	75%
SE-200-5	5V, 0~40A	±2%	150mV	79%
SE-200-7.5	7.5V, 0~26.5A	±2%	150mV	82%
SE-200-12	12V, 0~16.5A	±1%	150mV	83%
SE-200-15	15V, 0~13.3A	±1%	150mV	85%
SE-200-24	24V, 0~8.3A	±1%	150mV	87%
SE-200-27	27V, 0~7.4A	±1%	200mV	87%
SE-200-36	36V, 0~5.6A	±1%	240mV	87%
SE-200-48	48V, 0~4.2A	±1%	240mV	88%

350W — Under Development — SE-350

Model No.	Output	Tol.	R&N	Effi.
SE-350-3.3	3.3V, 0~60A	±2%	150mV	75%
SE-350-5	5V, 0~60A	±2%	150mV	79%
SE-350-7.5	7.5V, 0~46A	±2%	150mV	82%
SE-350-12	12V, 0~29A	±1%	150mV	83%
SE-350-15	15V, 0~23.2A	±1%	150mV	85%
SE-350-24	24V, 0~14.6A	±1%	150mV	87%
SE-350-27	27V, 0~13A	±1%	200mV	87%
SE-350-36	36V, 0~9.7A	±1%	240mV	87%
SE-350-48	48V, 0~7.3A	±1%	240mV	88%

450W — NEW — SE-450

Model No.	Output	Tol.	R&N	Effi.
SE-450-3.3	3.3V, 0~75A	±3%	200mV	74%
SE-450-5	5V, 0~75A	±3%	200mV	78%
SE-450-12	12V, 0~37.5A	±1%	200mV	83%
SE-450-15	15V, 0~30A	±1%	200mV	84%
SE-450-24	24V, 0~18.8A	±1.5%	200mV	86%
SE-450-36	36V, 0~12.5A	±1%	200mV	86%
SE-450-48	48V, 0~9.4A	±1%	200mV	88%

To satisfy our customers is our goal —

- High Quality
- Low Cost
- Prompt Delivery
- Best Service

We provide specification, drawing, test report and more information, please visit our website —
http://www.meanwell.com

48hrs delivery—
We keep enough stock for 95% of standard models at our 2400m² warehouse. We can arrange prompt delivery within 48hrs.

Best products also need best service.
We have authorized distributors all over the world. They have sufficient stock for your prompt delivery. Also they can offer you technical support & RMA services. Please contact your local distributors for more product information. You can also contact us at info@meanwell.com for information of your local distributors.

Enclosed-SE Series 600~1500W Single Output

Features

- AC input selectable by switch (600~1000W)
- AC input 180~264VAC only (SE-1500)
- Protections: Short circuit / Overload / Over voltage / Over temperature
- Forced air cooling by built-in DC fan
- Built-in remote sense function
- DC OK, remote ON/OFF control (SE-1000/1500)
- 100% full load burn-in test
- LED indicator for power on
- 2 years warranty

General Specification (Please refer to www.meanwell.com for detail spec.)

Model No.		SE-600	SE-1000	SE-1500 NEW
AC input voltage range		90~132VAC / 180~264VAC selected by switch		180~264VAC
AC inrush current (max.)		Cold start, 60A at 230VAC	Cold start, 55A at 230VAC	Cold start, 60A at 230VAC
DC adjustment range		±10% rated Output voltage		
Overload Protection	Range	105%~125%		
	Type	Shut down o/p voltage, re-power on to recover		
Over voltage protection		115%~140%		
Withstand voltage		I/P - O/P: 3kVAC, I/P - FG: 1.5kVAC, 1 minute		
Working temperature		-20~+60°C (refer to output derating curve)		-20~+70°C (refer to output derating curve)
Safety standards		UL60950-1 approved		
EMC standards		Design refer to EN55022 class B		
Connection		Terminal block with cover for input and output (SE-1000/1500: copper pillars for output)		
Dimension (LxWxH)(mm)		247x 127x 63.5	278x 127x 63.5	278x 177.8x 63.5
Case No.		926A	935B	982A
Packing		6pcs / 13.4kg	6pcs / 16kg	4pcs / 14.2kg

600W SE-600

Model No.	Output	Tol.	R&N	Effi.
SE-600-5	5V, 0~100A	±2%	150mV	78%
SE-600-12	12V, 0~50A	±1%	150mV	83%
SE-600-15	15V, 0~40A	±1%	150mV	84%
SE-600-24	24V, 0~25A	±1%	150mV	87%
SE-600-27	27V, 0~22.2A	±1%	150mV	87%
SE-600-36	36V, 0~16.6A	±1%	200mV	87%
SE-600-48	48V, 0~12.5A	±1%	200mV	88%

1000W SE-1000

Model No.	Output	Tol.	R&N	Effi.
SE-1000-5	5V, 0~150A	±1%	150mV	81%
SE-1000-9	9V, 0~100A	±1%	150mV	84%
SE-1000-12	12V, 0~83.3A	±1%	150mV	85%
SE-1000-15	15V, 0~66.7A	±1%	150mV	86%
SE-1000-24	24V, 0~41.7A	±1%	200mV	88%
SE-1000-48	48V, 0~20.8A	±1%	200mV	89%

1500W NEW SE-1500

Model No.	Output	Tol.	R&N	Effi.
SE-1500-5	5V, 0~300A	±2%	150mV	81%
SE-1500-12	12V, 0~125A	±1%	150mV	85%
SE-1500-15	15V, 0~100A	±1%	150mV	85%
SE-1500-24	24V, 0~62.5A	±1%	150mV	87%
SE-1500-27	27V, 0~55.6A	±1%	150mV	88%
SE-1500-48	48V, 0~31.3A	±1%	150mV	89%

Enclosed-G2 Series 25~150W Single Output

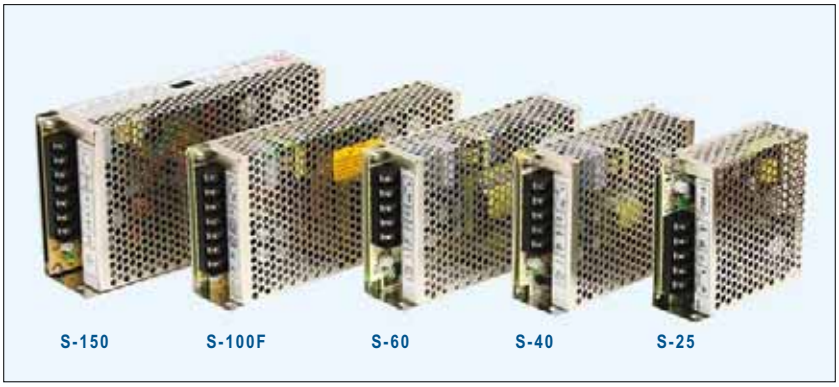

Features

- Universal AC input / Full range (25~60W)
  AC input selectable by switch (100~150W)
- Protections: Short circuit / Overload / Over voltage
- Cooling by free air convection
- 100% full load burn-in test
- 2 years warranty

General Specification (Please refer to www.meanwell.com for detail spec.)

Model No.		S-25	S-40	S-60	S-100F	S-150
AC input voltage range		85~264VAC, 120~370VDC			88~132/176~264 VAC selectable by switch	
AC inrush current (max.)		Cold start, 25A at 230VAC	Cold start, 50A at 230VAC	Cold start, 40A at 230VAC		Cold start, 35A at 230VAC
DC adjustment range		±10% rated output voltage				
Overload protection	Range	105%~150% rated output power				
	Type	Hiccup mode, auto-recovery				Shut off, AC recycle to re-start
Over voltage protection	Range	115%~135% rated output voltage				115%~145%
	Type	Hiccup mode, auto-recovery				Shut off, AC recycle to re-start
Withstand voltage		I/P - O/P: 3kVAC, I/P - FG: 1.5kVAC, O/P - FG: 0.5kVAC, 1 minute				
Working temperature		-10 ~ +60°C (refer to output derating curve)				
Safety standards		UL1012, TUV EN60950-1 approved	UL1012, UL60950-1 TUV EN60950-1 approved	UL1012, UL60950-1,TUV EN60950-1, GB4943 approved, CSA60950-1(S-100F-24 only)		
EMC standards		EN55022 class B, EN61000-3-2,3, ENV50204, EN61000-4-2,3,4,5,6,8,11 (S-25/40: EN61000-4-2,3,4,5 only), GB9254 (S-60 / S-100F / S-150 only)				
Connection		5P / 9.5mm pitch terminal block			7P / 9.5mm pitch terminal block	
Dimension (LxWxH)(mm)		99x 97x 36	129x 98x 38	159x 97x 38	199x 98x 38	199x 110x 50
Case No.		905	903	901	902	906
Packing		45pcs/18kg	30pcs/13.9kg	24pcs/13.1kg	20pcs/14.2kg	16pcs/13.8kg

S-25 Series

Model No.	Output	Tol.	R&N	Effi.
S-25-5	5V, 0~5A	±2%	50mV	72%
S-25-12	12V, 0~2.1A	±1%	100mV	76%
S-25-15	15V, 0~1.7A	±1%	100mV	77%
S-25-24	24V, 0~1.1A	±1%	100mV	80%

S-40 Series

Model No.	Output	Tol.	R&N	Effi.
S-40-5	5V, 0~8A	±2%	75mV	72%
S-40-12	12V, 0~3.5A	±1%	100mV	76%
S-40-15	15V, 0~2.8A	±1%	100mV	76%
S-40-24	24V, 0~1.8A	±1%	100mV	78%

S-60 Series

Model No.	Output	Tol.	R&N	Effi.
S-60-5	5V, 0~12A	±2%	120mV	73%
S-60-12	12V, 0~5.0A	±1%	120mV	76%
S-60-15	15V, 0~4.0A	±1%	150mV	77%
S-60-24	24V, 0~2.5A	±1%	150mV	79%

S-100F Series

(24V only)

Model No.	Output	Tol.	R&N	Effi.
S-100F-5	5V, 0~20A	±2%	100mV	76%
S-100F-7.5	7.5V, 0~13.5A	±1%	125mV	78%
S-100F-12	12V, 0~8.5A	±1%	125mV	80%
S-100F-15	15V, 0~6.7A	±1%	125mV	81%
S-100F-24	24V, 0~4.5A	±1%	150mV	83%
S-100F-48	48V, 0~2.2A	±1%	150mV	84%

S-150 Series

Model No.	Output	Tol.	R&N	Effi.
S-150-5	5V, 0~30A	±2%	150mV	78%
S-150-7.5	7.5V, 0~20A	±1%	150mV	80%
S-150-9	9V, 0~16.7A	±1%	180mV	80%
S-150-12	12V, 0~12.5A	±1%	180mV	82%
S-150-13.5	13.5V, 0~11.2A	±1%	180mV	83%
S-150-15	15V, 0~10A	±1%	180mV	84%
S-150-24	24V, 0~6.5A	±1%	240mV	85%
S-150-27	27V, 0~5.6A	±1%	240mV	86%
S-150-48	48V, 0~3.2A	±1%	240mV	87%

❖ Another SC model with constant current limiting & temperature compensation circuit.

Enclosed-G2 Series 210~320W Single Output

Features

- AC input selectable by switch
- Protections: Short circuit / Overload / Over voltage / Over temperature (S-250: Short circuit / Over voltage / Over temperature)
- Forced air cooling by built-in DC fan (except for S-210)
- Cooling fan ON/OFF auto control (S-320)
- 100% full load burn-in test
- LED indicator for power on
- 2 years warranty

General Specification (Please refer to www.meanwell.com for detail spec.)

Model No.		S-210	S-250	S-320
AC input voltage range		90~132VAC / 180~264VAC selectable by switch		
AC inrush current (max.)		Cold start, 50A at 230VAC	Cold start, 45A at 230VAC	Cold start, 36A at 230VAC
DC adjustment range		±10% rated Output voltage		
Overload protection	Range	105%~150%	105%~135%	
	Type	Hiccup mode, auto-recovery		
Over voltage protection		115%~145% rated output voltage	115%~135% rated output voltage	115%~145% rated output voltage
Withstand voltage		I/P - O/P: 3kVAC, I/P - FG: 1.5kVAC, 1 minute		
Working temperature		-20~+50°C	-10~+60°C	
Safety standards		UL60950-1 approved		
EMC standards		Design refer to EN55022 class B		
Connection		Terminal block with cover for input and output		
Dimension (LxWxH)(mm)		215x 115x 50	150x 140x 86	215x 115x 50
Case No.		912E	907	912
Packing		12pcs / 12.4kg	8pcs / 11.0kg	12pcs / 13.8kg

210W — S-210

Model No.	Output	Tol.	R&N	Effi.
S-210-5	5V, 0~40A	±2%	80mV	79%
S-210-7.5	7.5V, 0~27A	±2%	100mV	82%
S-210-12	12V, 0~17A	±1%	120mV	83%
S-210-13.5	13.5V, 0~15A	±1%	120mV	84%
S-210-15	15V, 0~14A	±1%	120mV	85%
S-210-24	24V, 0~8.8A	±1%	200mV	87%
S-210-27	27V, 0~7.8A	±1%	200mV	87%
S-210-48	48V, 0~4.4A	±1%	200mV	87%

250W — S-250

Model No.	Output	Tol.	R&N	Effi.
S-250-5	5V, 0~40A	±2%	80mV	74.0%
S-250-12	12V, 0~18A	±1%	120mV	79.0%
S-250-15	15V, 0~15A	±1%	120mV	80.0%
S-250-24	24V, 0~10A	±1%	120mV	81.5%
S-250-27	27V, 0~9.0A	±1%	150mV	82.0%
S-250-48	48V, 0~5.2A	±1%	200mV	82.0%

320W — S-320

Model No.	Output	Tol.	R&N	Effi.
S-320-5	5V, 0~50A	±2%	150mV	77%
S-320-7.5	7.5V, 0~36A	±2%	150mV	80%
S-320-12	12V, 0~25A	±1%	150mV	82%
S-320-13.5	13.5V, 0~22A	±1%	150mV	83%
S-320-15	15V, 0~20A	±1%	150mV	84%
S-320-24	24V, 0~12.5A	±1%	150mV	86%
S-320-27	27V, 0~11A	±1%	200mV	86%
S-320-48	48V, 0~6.5A	±1%	240mV	87%

48hrs delivery—
We keep enough stock for 95% of standard models at our 2400m² warehouse. We can arrange prompt delivery within 48hrs.

Enclosed-G2 Series

60W 2~4 Output

60W Dual and Triple Output Switching Power Supply

- Universal AC input / Full range
- Protections: Short circuit / Overload / Over voltage
- Fixed switching frequency at 54kHz (D-60)
- Fixed switching frequency at 50kHz (T-60)
- Cooling by free air convection
- 100% full load burn-in test
- 2 years warranty

AC input voltage range ..... 85~264VAC; 120~370VDC
AC inrush current ..... Cold start, 25A at 115VAC, 45A at 230VAC
DC adjustment range ..... CH1: -5~+10% rated output voltage
Overload protection ..... 105%~150% hiccup mode, auto-recovery
Over voltage protection .... CH1: 115%~135% rated output voltage
Setup, rise, hold up time ... 300ms, 50ms, 80ms at full load and 230VAC
Withstand voltage I/P-O/P:3.0kVAC, I/P-FG:1.5kVAC, 1minute
Working temperature ..... 0~45°C@100%, -10°C@80%, 60°C@60% load
Safety standards ..... UL1012, UL60950-1, TUV EN60950-1 approved
EMC standards ..... EN55022 class B, EN61000-3-2,3
EN61000-4-2,3,4,5,6,8,11, ENV50204
Connection ..... 7P/ 9.5mm pitch terminal block
10P/ 7.62mm pitch terminal block (IT-60)
Packing ..... 0.54kg ; 24pcs / 13.8kg / 0.75CUFT (D-60)
0.55kg ; 24pcs / 13.9kg / 0.75CUFT (ID-60)
0.55kg ; 24pcs / 14.1kg / 0.75CUFT (T-60)
0.51kg ; 24pcs / 13.2kg / 0.75CUFT (IT-60)

❖ Dual output

Model No.	Output	Tol.	R&N	Effi.	Max.
D-60A	5V, 0.3~6.0A	±2%	75mV	73%	56W
	12V, 0.2~4.0A	±6%	150mV		
D-60B	5V, 0.3~6.0A	±2%	75mV	76%	58W
	24V, 0.2~2.2A	±5%	150mV		

❖ Dual output (Note: 5V output is isolated from 24V)

Model No.	Output	Tol.	R&N	Effi.	Max.
ID-60B	5V, 0.3~6.0A	±2%	100mV	76%	58W
	24V, 0.2~2.2A	±8%	240mV		

❖ Triple output

Model No.	Output	Tol.	R&N	Effi.	Max.
T-60A	5V, 0.5~7.0A	±2%	100mV	72%	58W
	12V, 0.2~3.5A	±6%	100mV		
	-5V, 0.0~1.0A	±6%	100mV		
T-60B	5V, 0.5~7.0A	±2%	100mV	72%	61W
	12V, 0.2~3.5A	±6%	100mV		
	-12V, 0.0~1.0A	±6%	100mV		
T-60C	5V, 0.5~7.0A	±2%	100mV	72%	63W
	15V, 0.2~3.0A	±6%	100mV		
	-15V, 0.0~1.0A	±6%	100mV		

❖ Triple output (Note: All outputs are isolated)

Model No.	Output	Tol.	R&N	Effi.	Max.
IT-60D	5V, 0.5~3.0A	±3%	80mV	76%	58W
	12V, 0.1~1.0A	±8%	120mV		
	24V, 0.2~2.0A	±8%	240mV		
IT-60F	5V, 0.5~3.0A	±3%	80mV	76%	58W
	15V, 0.1~1.0A	±8%	150mV		
	24V, 0.2~2.0A	±8%	240mV		

▶ Note: Output isolated models can reduce noise interference from the system.

60W Quad Output Switching Power Supply

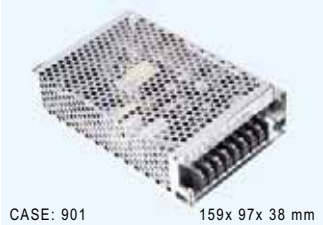

- Universal AC input / Full range
- Protections: Short circuit / Overload / Over voltage
- Approvals: UL / CUL / CE (TUV / CB also for Q-60)
- Cooling by free air convection
- 100% full load burn-in test
- 2 years warranty

AC input voltage range .....90~264VAC; 127~370VDC
DC adjustment range ..... CH1: -5~+10% rated output voltage
Overload protection ..... 105%~150% hiccup mode, auto-recovery
Over voltage protection ..... CH1: 115%~135% rated output voltage
Setup, rise, hold up time ..... 800ms, 20ms, 70ms at full load and 230VAC (Q-60)
300ms, 20ms, 80ms at full load and 230VAC (IQ-60)
Withstand voltage I/P-O/P:3.0kVAC, I/P-FG:1.5kVAC, 1minute
Working temperature ..... -10~60°C (refer to output derating curve)
Safety standards ..... UL60950-1 approved for Q-60
UL60950-1, TUV EN60950-1 approved for IQ-60
EMC standards ..... EN55022 class B, EN61000-3-2,3
EN61000-4-2,3,4,5,6,8,11, ENV50204
Connection ..... 8P/ 8.25mm pitch terminal block for Q-60
10P/ 7.62mm pitch terminal block for IQ-60
Packing ..... 0.56kg ; 24pcs / 14.4kg / 0.75CUFT (Q-60)
0.55kg ; 24pcs / 14.2kg / 0.75CUFT (IQ-60)

❖ Quad output and UL / CUL / CE approved

Model No.	Output	Tol.	R&N	Effi.	Max.
Q-60B	5V, 0.5~8.0A	±2%	100mV	70%	60W
	12V, 0.1~3.0A	±6%	120mV		
	-5V, 0.0~1.0A	±5%	100mV		
	-12V, 0.0~1.0A	±5%	120mV		
Q-60C	5V, 0.5~8.0A	±2%	100mV	72%	60W
	15V, 0.1~3.0A	+8%,-4%	120mV		
	-5V, 0.0~1.0A	±5%	100mV		
	-15V, 0.0~1.0A	±5%	120mV		
Q-60D	5V, 0.5~8.0A	±2%	100mV	75%	62W
	12V, 0.1~3.0A	±6%	120mV		
	24V, 0.1~1.5A	+8%,-4%	150mV		
	-12V, 0.0~1.0A	±5%	120mV		

❖ 5V, 24V are isolated from CH2 & CH3 and UL / CUL / TUV / CB / CE approved

Model No.	Output	Tol.	R&N	Effi.	Max.
IQ-60D	5V, 0.5~3.0A	±3%	80mV	76%	58W
	12V, 0.1~1.0A	±8%	120mV		
	-12V, 0.1~1.0A	±8%	120mV		
	24V, 0.2~2.0A	±8%	240mV		
IQ-60F	5V, 0.5~3.0A	±3%	80mV	76%	60W
	15V, 0.1~1.0A	±8%	150mV		
	-15V, 0.1~1.0A	±8%	150mV		
	24V, 0.2~2.0A	±8%	240mV		

Enclosed-G2 Series

40~250W 2~4 Output

120W 2~4 Output Switching Power Supply

CASE: 906 199x 110x 50 mm

- AC input range selectable by switch
- Protections: Short circuit / Overload / Over voltage
- Cooling by free air convection
- 100% full load burn-in test
- 2 years warranty

AC input voltage range ..... 88~132VAC / 176~264VAC selectable by switch
DC adjustment range ..... CH1: -5~+10% rated output voltage
Overload protection ..... 105%~135% shut off, AC recycle to re-start
Over voltage protection ..... CH1: 115%~135% rated output voltage
Setup, rise, hold up time ... 200ms, 50ms, 20ms at full load and 230VAC (D-120, Q-120); 800ms, 20ms, 20ms at full load and 230VAC(T-120)
Withstand voltage I/P-O/P:3.0kVAC, I/P-FG:1.5kVAC, 1minute
Working temperature ..... 0~50°C@100%, -10°C@80%, 60°C@40% load (D-120) / 60% load (T-120, Q-120)
Safety standards ..... UL60950-1, TUV EN60950-1, GB4943 approved
EMC standards ..... EN55022 class B, EN61000-3-2,3, GB9254, EN61000-4-2,3,4,5,6,8,11, ENV50204
Connection ..... 8P/ 9.5mm pitch terminal block
Packing ..... 0.82kg ; 16pcs / 14.2kg / 0.95CUFT (D-120)
0.83kg ; 16pcs / 14.2kg / 0.95CUFT (T-120)
0.86kg ; 16pcs / 14.7kg / 0.95CUFT (Q-120)

❖ Dual output

Model No.	Output	Tol.	R&N	Effi.	Max.
D-120A	5V, 2.0~12A	±2%	60mV	78%	120W
	12V, 0.5~5.0A	±6%	120mV		
D-120B	5V, 2.0~10A	±2%	60mV	80%	126W
	24V, 0.4~4.0A	±7%	150mV		

❖ Triple output

Model No.	Output	Tol.	R&N	Effi.	Max.
T-120A	5V, 2.0~12A	±2%	80mV	77%	120W
	12V, 0.5~5.0A	±6%	120mV		
	-5V, 0.2~1.0A	±6%	80mV		
T-120B	5V, 2.0~12A	±2%	80mV	77%	121W
	12V, 0.5~5.0A	±6%	120mV		
	-12V, 0.2~1.0A	±6%	120mV		
T-120C	5V, 2.0~12A	±2%	80mV	76%	118W
	15V, 0.5~5.0A	+10%,-5%	150mV		
	-15V, 0.2~1.0A	+10%,-5%	150mV		
T-120D	5V, 2.0~12A	±2%	80mV	80%	118W
	12V, 0.2~5.0A	±6%	120mV		
	24V, 0.2~2.0A	±6%	180mV		

❖ Quad output

Model No.	Output	Tol.	R&N	Effi.	Max.
Q-120B	5V, 2.0~12A	±2%	80mV	77%	120W
	12V, 0.5~5.0A	±6%	120mV		
	-5V, 0.2~1.0A	±6%	80mV		
	-12V, 0.2~1.0A	±6%	120mV		
Q-120C	5V, 2.0~12A	±2%	80mV	76%	123W
	15V, 0.5~5.0A	+10%,-5%	150mV		
	-5V, 0.2~1.0A	±6%	80mV		
	-15V, 0.2~1.0A	+10%,-5%	150mV		
Q-120D	5V, 2.0~12A	±2%	80mV	80%	124W
	12V, 0.2~5.0A	±6%	120mV		
	24V, 0.2~2.0A	±6%	180mV		
	-12V, 0.2~1.0A	±6%	120mV		

250W Quad Output Switching Power Supply

CASE: 907 150x 140x 86 mm

- AC input range selectable by switch
- Protections: Short circuit / Overload / Over voltage
- Fixed switching frequency at 75kHz
- Forced air cooling by built-in DC fan
- 100% full load burn-in test
- Low cost, high reliability
- 2 years warranty

AC input voltage range ..... 90~132VAC / 176~264VAC selectable by switch
DC adjustment range ..... CH1: -5~+10% rated output voltage
Overload protection ..... 105%~150% hiccup mode, auto-recovery
Over voltage protection .... CH1: 115%~135% rated output voltage
Setup, rise, hold up time ... 800ms, 50ms, 20ms at full load and 230VAC
Working temperature ..... -10~50°C@100%, 60°C@60% load
Safety standards ..... UL60950-1 approved
Connection ..... 9P/ 9.5mm pitch terminal block with cover
Packing ..... 1.4kg ; 8pcs / 11.5kg / 0.97CUFT

Model No.	Output	Tol.	R&N	Effi.	Max.
Q-250B	5V, 2.0~20A	±2%	80mV	73%	201W
	12V, 0.5~7.0A	+8%,-10%	120mV		
	-12V, 0.5~1.0A	±10%	120mV		
	-5V, 0.0~1.0A	±6%	50mV		
Q-250C	5V, 2.0~20A	±2%	80mV	74%	195W
	15V, 0.5~5.0A	±10%	150mV		
	-15V, 0.5~1.0A	±10%	150mV		
	-5V, 0.0~1.0A	±6%	50mV		
Q-250D	5V, 2.0~15A	±2%	80mV	78%	242W
	12V, 0.5~6.0A	+6%,-10%	120mV		
	24V, 0.5~5.0A	±8%	240mV		
	-12V, 0.0~1.0A	±6%	120mV		
Q-250F	5V, 2.0~15A	±2%	80mV	78%	245W
	15V, 0.5~5.0A	+6%,-10%	150mV		
	24V, 0.5~5.0A	±8%	240mV		
	-15V, 0.0~1.0A	±6%	150mV		

40W Triple Output Switching Power Supply

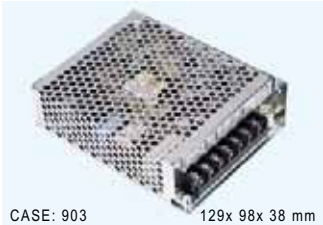

CASE: 903 129x 98x 38 mm

- Universal AC input / Full range
- Protections: Short circuit / Overload / Over voltage
- Fixed switching frequency at 40kHz
- Cooling by free air convection
- 100% full load burn-in test
- 2 years warranty

AC input voltage range ..... 85~264VAC; 120~370VDC
DC adjustment range ..... CH1: -5~+10% rated output voltage
Overload protection ..... 105%~150% hiccup mode, auto-recovery
Over voltage protection ..... CH1: 115%~135% rated output voltage
Withstand voltage I/P-O/P:3kVAC, I/P-FG:1.5kVAC, 1minute
Working temperature ..... 0~50°C@100%, -10°C@80%, 60°C@60% load
Safety standards ..... CSA60950-1 approved
EMC standards ..... EN55022 class B, EN61000-3-2,3
EN61000-4-2,3,4,5,6,8,11, ENV50204
Connection ..... 7P/ 9.5mm pitch terminal block with cover
Packing ..... 0.44kg ; 30pcs / 14.7kg / 0.86CUFT

Model No.	Output	Tol.	R&N	Effi.	Max.
T-40A	5V, 0.6~5.0A	±2%	100mV	72%	42W
	12V, 0.2~3.0A	±6%	120mV		
	-5V, 0.1~1.0A	±8%	100mV		
T-40B	5V, 0.6~5.0A	±2%	100mV	72%	45W
	12V, 0.2~3.0A	±6%	120mV		
	-12V, 0.1~1.0A	±8%	120mV		
T-40C	5V, 0.6~5.0A	±2%	100mV	72%	45W
	15V, 0.2~2.0A	±6%	120mV		
	-15V, 0.1~1.0A	±6%	120mV		

Enclosed-PFC

75~240W Single Output

Features

- Universal AC input / Full range
- Built-in active PFC function, PF>0.93 (SP-240, PF>0.95)
- Protections: Short circuit / Overload / Over voltage / Over temp.(SP-150 / 200 / 240)
- Cooling by free air convection (SP-75 / 100 / 150)
- Forced air cooling by built-in DC fan (SP-200 / 240)
- Optional remote ON/OFF control (SP-75~200)
- Built-in fan speed control (SP-200)
- Built-in fan ON/OFF control (SP-240)
- 100% full load burn-in test
- 3 years warranty

General Specification (Please refer to www.meanwell.com for detail spec.)

Model No.		SP-75	SP-100	SP-150	SP-200	SP-240 NEW
AC input voltage range		85~264VAC, 120~370VDC				88~264VAC, 124~370VDC
AC inrush current (max.)		Cold start, 30A at 230VAC		Cold start, 40A at 230VAC		
DC adjustment range		-5~+10% rated output voltage				±15% rated output voltage
Overload protection	Range	105%~150%				105%~135%
	Type	Constant current, auto-recovery				Hiccup mode, auto-recovery
Over voltage protection	Range	115%~135%	110%~135%			120%~150%
	Type	Shut off, AC recycle to re-start				
Withstand voltage		I/P-O/P: 3kVAC, I/P-FG: 1.5kVAC, O/P-FG: 0.5kVAC, 1 minute				
Working temperature		-10~+60°C		-10~+50°C	-10~+60°C	-20~+70°C
Safety standards		UL60950-1, TUV EN60950-1 approved				
EMC standards		EN55022 class B, EN61000-4-2,3,4,5,6,8,11, EN61000-3-2,3, ENV50204				
Connection		5P / 9.5mm pitch	7P / 9.5mm pitch terminal block with cover			
Dimension (LxWxH)(mm)		179x99x33	179x99x45	199x99x50	199x99x50	190x93x50
Case No.		920A	915A	916A	916B	987A
Packing		20pcs/12.0kg	20pcs/14.3kg	20pcs/16.4kg	20pcs/17.9kg	18pcs/15.4kg

75W — SP-75

Model No.	Output	Tol.	R&N	Effi.
SP-75-3.3	3.3V, 0~15A	±2%	80mV	68%
SP-75-5	5V, 0~15A	±2%	80mV	72%
SP-75-7.5	7.5V, 0~10A	±2%	80mV	74%
SP-75-12	12V, 0~6.3A	±2%	80mV	77%
SP-75-13.5	13.5V, 0~5.6A	±2%	80mV	78%
SP-75-15	15V, 0~5.0A	±2%	80mV	79%
SP-75-24	24V, 0~3.2A	±1%	100mV	80%
SP-75-27	27V, 0~2.8A	±1%	100mV	80%
SP-75-48	48V, 0~1.6A	±1%	100mV	80%

100W — SP-100

Model No.	Output	Tol.	R&N	Effi.
SP-100-3.3	3.3V, 0~20.0A	±2%	100mV	70%
SP-100-5	5V, 0~20.0A	±2%	100mV	76%
SP-100-7.5	7.5V, 0~13.5A	±2%	100mV	78%
SP-100-12	12V, 0~8.50A	±2%	100mV	80%
SP-100-13.5	13.5V, 0~7.50A	±2%	100mV	80%
SP-100-15	15V, 0~6.70A	±2%	100mV	82%
SP-100-24	24V, 0~4.20A	±1%	150mV	84%
SP-100-27	27V, 0~3.80A	±1%	150mV	83%
SP-100-48	48V, 0~2.10A	±1%	250mV	82%

48hrs delivery—
We keep enough stock for 95% of standard models at our 2400m² warehouse. We can arrange prompt delivery within 48hrs.

150W — SP-150

Model No.	Output	Tol.	R&N	Effi.
SP-150-3.3	3.3V, 0~30.0A	±2%	100mV	67%
SP-150-5	5V, 0~30.0A	±2%	100mV	75%
SP-150-7.5	7.5V, 0~20.0A	±2%	100mV	79%
SP-150-12	12V, 0~12.5A	±2%	100mV	80%
SP-150-13.5	13.5V, 0~11.2A	±2%	100mV	80%
SP-150-15	15V, 0~10.0A	±2%	100mV	81%
SP-150-24	24V, 0~6.30A	±1%	150mV	83%
SP-150-27	27V, 0~5.60A	±1%	150mV	84%
SP-150-48	48V, 0~3.20A	±1%	250mV	84%

200W — SP-200

Model No.	Output	Tol.	R&N	Effi.
SP-200-3.3	3.3V, 0~40.0A	±2%	100mV	65%
SP-200-5	5V, 0~40.0A	±2%	100mV	71%
SP-200-7.5	7.5V, 0~26.7A	±2%	100mV	76%
SP-200-12	12V, 0~16.7A	±2%	100mV	79%
SP-200-13.5	13.5V, 0~14.9A	±2%	100mV	80%
SP-200-15	15V, 0~13.4A	±2%	100mV	81%
SP-200-24	24V, 0~8.40A	±1%	150mV	83%
SP-200-27	27V, 0~7.50A	±1%	150mV	83%
SP-200-48	48V, 0~4.20A	±1%	250mV	84%

240W — NEW SP-240

Model No.	Output	Tol.	R&N	Effi.
SP-240-5	5V, 0~45A	±2%	150mV	79%
SP-240-7.5	7.5V, 0~32A	±2%	150mV	83%
SP-240-12	12V, 0~20A	±1%	150mV	86%
SP-240-15	15V, 0~16A	±1%	150mV	86%
SP-240-24	24V, 0~10A	±1%	150mV	88%
SP-240-30	30V, 0~8.0A	±1%	150mV	88%
SP-240-48	48V, 0~5.0A	±1%	150mV	89%

Enclosed-PFC

320~750W Single Output

Features

- Universal AC input / Full range
- Built-in active PFC function, PF>0.95
- Protections: Short circuit / Overload / Over voltage / Over temperature
- Forced air cooling by built-in DC fan
- Built-in remote sense function and ON/OFF control (SP-480/500/750)
- Built-in fan speed control (SP-320)
- Built-in fan ON/OFF control (SP-500)
- With PG/PF signal output (SP-750)
- 100% full load burn-in test
- 3 years warranty

General Specification (Please refer to www.meanwell.com for detail spec.)

Model No.		SP-320	SP-480	SP-500	SP-750
AC input voltage range		88~264VAC	85~264VAC	88~264VAC	90~264VAC
AC inrush current (max.)		Cold start, 40A at 230VAC		Cold Start, 36A at 230VAC	Cold Start, 45A at 230VAC
DC adjustment range		±10% rated output voltage			
Overload protection	Range	105~135%	105~145%	105~135%	105~125%
	Type	Hiccup mode, auto-recovery	Constant current limiting, auto-recovery	Fold back current limiting, auto-recovery	Constant current limiting, hiccup after 3sec.
Over voltage protection		115~145%	115~140%		
Withstand voltage		I/P - O/P: 3kVAC, I/P - FG: 1.5kVAC, O/P - FG: 0.5kVAC, 1 minute			
Working temperature		-20~+65°C	-20~+60°C	-10~+50°C	-20~+60°C
Safety standards		UL60950-1, TUV EN65950-1 approved, GB4943 approved also for SP-320			
EMC standards		EN55022 class B, EN61000-4-2,3,4,5,6,8,11, EN61000-3-2,3, ENV50204, EN61000-6-2(SP-320 / 480 / 750), GB9254 (SP-320 only)			
Connection		9P / 9.5mm pitch terminal block with cover	9P / 11mm pitch terminal block with cover	7+8P / 9.5mm pitch terminal block with cover	5P / 10mm pitch terminal block with cover for input; copper pillars for output
Dimension (LxWxH)(mm)		215x115x50	278x127x43	170x120x93	278x127x63.5
Case No.		912G	929	910	919A
Packing		12pcs / 14.0kg	6pcs / 11.3kg	8pcs / 15.5kg	6pcs / 18.4kg

SP-320 Series

Model No.	Output	Tol.	R&N	Effi.
SP-320-3.3	3.3V, 0~60.0A	±1%	150mV	74%
SP-320-5	5V, 0~55.0A	±2%	150mV	79%
SP-320-5PNC	5V, 0~55.0A	±2%	150mV	80%
SP-320-7.5	7.5V, 0~40.0A	±2%	150mV	83%
SP-320-12	12V, 0~25.0A	±1%	150mV	86%
SP-320-13.5	13.5V, 0~22.0A	±1%	150mV	86%
SP-320-15	15V, 0~20.0A	±1%	150mV	86%
SP-320-24	24V, 0~13.0A	±1%	150mV	87%
SP-320-27	27V, 0~11.7A	±1%	200mV	88%
SP-320-36	36V, 0~8.80A	±1%	220mV	87%
SP-320-48	48V, 0~6.70A	±1%	240mV	89%

❖SP-320-5PNC with conformal coating and high ambient temperature operation ability is suitable for LED moving sign applications

SP-480 Series

Model No.	Output	Tol.	R&N	Effi.
SP-480-3.3	3.3V, 0~85A	±2.0%	80mV	73%
SP-480-5	5V, 0~85A	±2.0%	80mV	79%
SP-480-12	12V, 0~43A	±1.5%	120mV	85%
SP-480-15	15V, 0~35A	±1.5%	150mV	85%
SP-480-24	24V, 0~22A	±1.0%	150mV	87%
SP-480-48	48V, 0~11A	±1.0%	240mV	89%

SP-500 Series

Model No.	Output	Tol.	R&N	Effi.
SP-500-12	12V, 0~40A	±1%	240mV	84.0%
SP-500-13.5	13.5V, 0~36A	±1%	240mV	84.0%
SP-500-15	15V, 0~32A	±1%	240mV	83.0%
SP-500-24	24V, 0~20A	±1%	240mV	85.5%
SP-500-27	27V, 0~18A	±1%	200mV	86.5%
SP-500-48	48V, 0~10A	±1%	300mV	87.0%

SP-750 Series

Model No.	Output	Tol.	R&N	Effi.
SP-750-5	5V, 0~120A	±2%	120mV	81%
SP-750-12	12V, 0~62.5A	±1%	120mV	85%
SP-750-15	15V, 0~50.0A	±1%	120mV	87%
SP-750-24	24V, 0~31.3A	±1%	120mV	89%
SP-750-27	27V, 0~27.8A	±1%	120mV	89%
SP-750-48	48V, 0~15.7A	±1%	120mV	90%

Q.A.
Who can provide you better services and be a trustworthy partner in the power industry?
— "MEAN WELL" tries to be —

Enclosed-PFC

500~1500W Single Output

500W with PFC and Parallel Function

CASE: 919 278x 127x 63.5 mm

- Universal AC input / Full range
- PF>0.98@115VAC; >0.95@230VAC
- Protections: Short circuit / Overload / Over voltage / Over temp.
- Current sharing up to 2000W (3+1)
- Built-in remote sense function
- Built-in remote ON/OFF control
- Forced air cooling by built-in DC fan
- Power good and fail signal output
- Open frame models available (option)
- 3 years warranty

AC input voltage range ..... 90~264VAC; 127~370VDC
DC adjustment range ..... ±10% rated output voltage
Overload protection ..... 110%~125% constant current, auto-recovery
Over voltage protection ..... 115%~140% rated output voltage
Setup, rise, hold up time ..... 1500ms, 50ms, 24ms at full load and 230VAC
Withstand voltage ..... I/P-O/P:3kVAC, I/P-FG:1.5kVAC, 1 minute
Working temperature .....-10~60°C (refer to output derating curve)
Safety standards ..... UL60950-1, TUV EN60950-1 approved
EMC standards ..... EN55022 class B, EN61000-3-2,3, EN61000-4-2,3,4,5,6,8,11, ENV50204
Packing ..... 2.6kg ; 6pcs / 15.7kg / 0.89CUFT

Model No.	Output	Tol.	R&N	Effi.
PSP-500-5	5V, 0~80.0A	±2%	100mV	76%
PSP-500-12	12V, 0~41.5A	±1%	150mV	82%
PSP-500-13.5	13.5V, 0~37.0A	±1%	150mV	82%
PSP-500-15	15V, 0~33.0A	±1%	150mV	82%
PSP-500-24	24V, 0~20.8A	±1%	150mV	84%
PSP-500-27	27V, 0~18.5A	±1%	150mV	84%
PSP-500-48	48V, 0~10.5A	±1%	200mV	86%

600W with PFC and Parallel Function

CASE: 910A 170x 120x 93 mm

- Universal AC input / Full range
- PF>0.99@115VAC; >0.95@230VAC
- Protections: Short circuit / Overload / Over voltage / Over temp.
- Forced air cooling by built-in DC fan
- Built-in remote sense and ON/OFF control
- With DC OK signal output
- Current sharing up to 2400W (3+1)
- 3 years warranty

AC input voltage range ..... 88~264VAC; 124~370VDC
AC inrush current ..... Cold start, 20A at 115VAC, 40A at 230VAC
DC adjustment range ..... ±10% rated output voltage
Overload protection ..... 105%~135% constant current, auto-recovery
Over voltage protection ..... 115%~140% rated output voltage
Withstand voltage ..... I/P-O/P:3kVAC, I/P-FG:1.5kVAC, 1 minute
Working temperature ..... -20~60°C (refer to output derating curve)
Safety standards ..... UL60950-1, TUV EN60950-1 approved
EMC standards ..... EN55022 class B, EN61000-3-2,3 EN61000-4-2,3,4,5,6,8,11, ENV50204
Connection ..... 7+8P/ 9.5mm pitch terminal block with cover
Packing ..... 1.9kg ; 8pcs / 15.5kg / 1.06CUFT

Model No.	Output	Tol.	R&N	Effi.
PSP-600-5	5V, 0~80.0A	±2%	180mV	79%
PSP-600-12	12V, 0~50.0A	±1%	240mV	84%
PSP-600-13.5	13.5V, 0~44.5A	±1%	240mV	85%
PSP-600-15	15V, 0~40.0A	±1%	240mV	85%
PSP-600-24	24V, 0~25.0A	±1%	240mV	86%
PSP-600-27	27V, 0~22.2A	±1%	240mV	86%
PSP-600-48	48V, 0~12.5A	±1%	300mV	87%

1000W with PFC and Parallel Function

CASE: 952B 295x 127x 41 mm

- 1U low profile
- Univeral AC input / Full range
- PF>0.98@115VAC; >0.95@230VAC
- Protections: Short circuit / Overload / Over voltage / Over temp.
- High power density 10.7W/in³
- Output voltage can be trimmed between 40~110% of the rated output voltage
- Current sharing up to 4000W (3+1)
- DC OK signal
- Built-in remote sense and ON/OFF control
- Built-in 5V/0.5A auxiliary power
- 3 years warranty

AC input voltage range .....90~264VAC; 127~370VDC
DC adjustment range ..... ±10% rated output voltage
Overload protection ..... 105%~125% constant current, auto-recovery
Over voltage protection ..... 115%~135% rated output voltage
Setup, rise, hold up time ..... 300ms, 50ms, 16ms at full load and 230VAC
Withstand voltage ..... I/P-O/P:3kVAC, I/P-FG:1.5kVAC, 1 minute
Working temperature .....-20~50°C@100%, 60°C@60% load
Safety standards ..... UL60950-1, TUV EN60950-1 approved
EMC standards ..... EN55022 Class B conducted, EN61000-3-2,3, ENV50204, EN61000-4-2,3,4,5,6,8,11, EN61000-6-2
Packing ..... 1.95kg ; 6pcs / 12.7kg / 0.99CUFT

Model No.	Output	Tol.	R&N	Effi.
RSP-1000-12	12V, 0~60A	±1%	150mV	83%
RSP-1000-15	15V, 0~50A	±1%	150mV	85%
RSP-1000-24	24V, 0~40A	±1%	150mV	88%
RSP-1000-27	27V, 0~37A	±1%	150mV	88%
RSP-1000-48	48V, 0~21A	±1%	150mV	90%

1500W with PFC and Parallel Function

CASE: 943 278x 127x 83.5 mm

- Universal AC input / Full range
- PF>0.98@115VAC; >0.95@230VAC
- Protections: Short circuit / Overload Over voltage / Over temp.
- Using ZVS technology to reduce power dissipation
- High power density 8.3W/in³
- Built-in 12V / 0.1A auxiliary output
- Alarm signal output
- DC output voltage adjustment 70~100% by external resistor
- Active current sharing up to 6000W (3+1)
- Built-in remote sense function
- Built-in remote ON/OFF control
- Forced air cooling by built-in DC fan
- 3 years warranty

AC input voltage range ..... 90~264VAC; 127~370VDC
DC adjustment range .....-30~+10% rated output voltage
Overload protection ..... 105%~135% constant current limiting, shut off after 5 sec.
Over voltage protection ..... 115%~140% rated output voltage
Setup, rise, hold up time .... 1500ms, 100ms, 10ms at full load and 230VAC
Withstand voltage ..... I/P-O/P:3kVAC, I/P-FG:1.5kVAC, 1 minute
Working temperature ..... -20~70°C (refer to output derating curve)
Safety standards ..... UL60950-1, TUV EN60950-1 approved
EMC standards ..... EN55022 class B conducted, EN61000-3-2,3, EN61000-4-2,3,4,5,6,8,11, ENV50204
Packing .....3.0kg ; 6pcs / 20.5kg / 1.54CUFT

Model No.	Output	Tol.	R&N	Effi.
RSP-1500-5	5V, 0~240A	±2%	150mV	80%
RSP-1500-12	12V, 0~125A	±1%	150mV	87%
RSP-1500-15	15V, 0~100A	±1%	150mV	87%
RSP-1500-24	24V, 0~63A	±1%	150mV	90%
RSP-1500-27	27V, 0~56A	±1%	150mV	90%
RSP-1500-48	48V, 0~32A	±1%	200mV	91%

2400W with PFC and Parallel Function

CASE: 982B 278x 177.8x 63.5 mm

- AC input 180~264VAC only
- Built-in active PFC function,PF>0.95
- Protections: Short circuit / Overload/ Over voltage / Over temp./ Fan alarm
- Forced air cooling by built-in DC with fan speed control function
- Output voltage can be trimmed between 20~110% of the rated output voltage
- High power density 12.5W/inch³
- Current sharing up to 3 units
- Alarm signal output (TTL signal & relay contact)
- Built-in 12V/0.1A auxiliary output for remote control
- Built-in remote ON-OFF control
- Built-in remote sense function
- 3 years warranty

AC input voltage range ..... 180~264VAC; 254~370VDC
DC adjustment range ..... ±10% rated output voltage
Overload protection ..... 100%~110% constant current limiting, shut off after 5 sec., re-power on to recover (can adjust to continuous constant current limiting)
Over voltage protection ..... 115%~140% rated output voltage
Setup, rise, hold up time .... 1000ms, 80ms, 10ms at full load and 230VAC
Withstand voltage ..... I/P-O/P:3kVAC, I/P-FG:1.5kVAC, 1 minute
Working temperature ..... -20~70°C (refer to output derating curve)
Safety standards ..... UL60950-1, TUV EN60950-1 approved
EMC standards ..... EN55022 class B, EN61000-3-2,3, EN61000-4-2,3,4,5,6,8,11, ENV50204
Packing ..... 3.3kg ; 4pcs / 14.2kg / 1.89CUFT

Model No.	Output	Tol.	R&N	Effi.
RSP-2400-12	12V, 0~166.7A	±1%	150mV	87.0%
RSP-2400-24	24V, 0~100A	±1%	150mV	89.5%
RSP-2400-48	48V, 0~50A	±1%	200mV	91.5%

3000W with PFC and Parallel Function

CASE: 982B 278x 177.8x 63.5 mm

- AC input 180~264VAC only
- Built-in active PFC function,PF>0.95
- Protections: Short circuit / Overload/ Over voltage / Over temp./ Fan alarm
- Forced air cooling by built-in DC with fan speed control function
- Output voltage can be trimmed between 20~110% of the rated output voltage
- High power density 15.6W/inch³
- Current sharing up to 3 units
- Alarm signal output (TTL signal & relay contact)
- Built-in 12V/0.1A auxiliary output for remote control
- Built-in remote ON-OFF control
- Built-in remote sense function
- 3 years warranty

AC input voltage range ..... 180~264VAC; 254~370VDC
DC adjustment range ..... ±10% rated output voltage
Overload protection ..... 100%~110% constant current limiting, shut off after 5 sec., re-power on to recover (can adjust to continuous constant current limiting)
Over voltage protection ..... 115%~140% rated output voltage
Setup, rise, hold up time .... 1000ms, 80ms, 10ms at full load and 230VAC
Withstand voltage ..... I/P-O/P:3kVAC, I/P-FG:1.5kVAC, 1 minute
Working temperature ..... -20~70°C (refer to output derating curve)
Safety standards ..... UL60950-1, TUV EN60950-1 approved
EMC standards ..... EN55022 class B, EN61000-3-2,3, EN61000-4-2,3,4,5,6,8,11, ENV50204
Packing ..... 4kg ; 4pcs / 17kg / 1.89CUFT

Model No.	Output	Tol.	R&N	Effi.
RSP-3000-12	12V, 0~200A	±1%	150mV	86.0%
RSP-3000-24	24V, 0~125A	±1%	150mV	90.0%
RSP-3000-48	48V, 0~62.5A	±1%	200mV	90.5%

75W Triple Output with PFC Function

CASE: 920A 179x 99x 33 mm

- Universal AC input / Full range
- PF>0.98@115VAC; >0.95@230VAC
- Thin profile (33mm thickness)
- Protections: Short circuit / Overload / Over voltage
- Cooling by free air convection
- Fixed switching frequency at 134kHz
- 3 years warranty

AC input voltage range ..... 90~264VAC; 120~370VDC
DC adjustment range ..... CH1: -5~+10% rated output voltage
Overload protection ..... 105~150% hiccup mode, auto-recovery
Over voltage protection ..... CH1: 115~135% rated output voltage
Withstand voltage ..... I/P-O/P: 3kVAC, I/P-FG: 1.5kVAC, 1minute
Working temperature ..... -10°C~60°C (refer to output derating curve)
Safety standards ..... UL60950-1, TUV EN60950-1 approved
EMC standards ..... EN55022 class B, EN61000-3-2,3 EN61000-4-2,3,4,5,6,8,11, ENV50204
Connection ..... 8P/ 7.62mm pitch terminal block
Packing ..... 0.65kg ; 20pcs / 12.7kg / 0.64CUFT

Model No.	Output	Tol.	R&N	Effi.	Max.
TP-75A	5V, 1.5~10A	±3%	100mV	70%	74W
	12V, 0.2~4.0A	±4%	120mV		
	-5V, 0.0~0.6A	±8%	100mV		
TP-75B	5V, 1.5~10A	±3%	100mV	70%	76W
	12V, 0.2~4.0A	±4%	120mV		
	-12V, 0.0~0.6A	±8%	120mV		
TP-75C	5V, 1.5~10A	±3%	100mV	70%	75W
	15V, 0.2~3.0A	±4%	120mV		
	-15V, 0.0~0.6A	±8%	120mV		
TP-75D	5V, 1.5~10A	±3%	100mV	70%	76W
	24V, 0.2~2.5A	±4%	120mV		
	12V, 0.0~0.6A	±8%	120mV		
TP-7503	5V, 1.5~10A	±3%	100mV	70%	75W
	3.3V, 0.2~8.0A	±4%	50mV		
	12V, 0.0~0.6A	±8%	120mV		

320W Quad Output with PFC Function

CASE: 912I 215x 115x 50 mm

- Universal AC input / Full range
- PF>0.98@115VAC; >0.95@230VAC
- 20A peak load capability for 24V channel
- CH1, 2 can be adjusted from -5~+10%
- PG and PF signal output
- Built-in remote sense for CH1,2
- Protections: Short circuit / Overload / Over voltage / Over temp.
- Forced air cooling by built-in DC fan
- 100% full load burn-in test
- 3 years warranty

AC input voltage range .... 90~264VAC; 127~370VDC
DC adjustment range ..... -5~+10% for CH1 and CH2 output
Overload protection ..... 105%~150% fold back current limiting,auto-recovery
Over voltage protection ... 115%~135% rated output voltage for CH1 & CH2
Withstand voltage ..... I/P-O/P: 3kVAC, I/P-FG:1.5kVAC, 1minute
Working temperature ..... -10°C~50°C@100%, 70°C@40% load
Safety standards ..... UL60950-1, TUV EN60950-1 approved
EMC standards ..... EN55022 class B, EN61000-3-2,3, EN61000-4-2,3,4,5,6,8,11, ENV50204
Connection ..... 9P/ 9.5mm pitch terminal block with cover
Packing ..... 1.2kg ; 12pcs / 15.4kg / 0.92CUFT

Model No.	Output	Tol.	R&N	Effi.	Max.
QP-320D	5V, 2.5~20A	±3%	100mV	83%	316W
	12V, 0.0~10A	±3%	150mV		
	24V, 0.2~5.0A	+10%,-6%	150mV		
	-12V, 0.2~2.0A	±10%	150mV		
QP-320F	5V, 2.5~20A	±3%	100mV	83%	316W
	15V, 0.0~10A	±3%	150mV		
	24V, 0.2~5.0A	+10%,-6%	150mV		
	-15V, 0.2~1.6A	±10%	150mV		

100W Triple and Quad Output with PFC Function

CASE: 916A 199x 99x 50 mm

- Universal AC input / Full range
- PF>0.98@115VAC; >0.94@230VAC
- Protections: Short circuit / Overload / Over voltage
- Over temp. protection (option)
- Cooling by free air convection
- CH4 polarity can be reversed for QP-100-3X and QP-100D/F (option)
- 3 years warranty

AC input voltage range ..... 90~264VAC; 127~370VDC
AC inrush current ..... Cold start, 40A at 230VAC
DC adjustment range ..... CH1: -5~+10% rated output voltage (CH1&2 for QP-100-3X and QP-100D/F)
Overload protection ..... 105~150% hiccup mode, auto-recovery
Over voltage protection ..... 115~135% for CH1 or CH1&2
Withstand voltage ..... I/P-O/P: 3kVAC, I/P-FG: 1.5kVAC, 1 minute
Working temperature ..... -10~60°C (refer to output derating curve)
Safety standards ..... UL60950-1, TUV EN60950-1 approved
EMC standards ..... EN55022 class B, EN61000-4-2,3,4,5,6,8,11, EN61000-3-2,3, ENV50204
Connection ..... 7.62mm pitch terminal block with cover
Packing ..... 0.83kg ; 20pcs / 17.6kg / 1.28CUFT (TP-100)
0.87kg ; 20pcs / 18.4kg / 1.28CUFT (QP-100)

❖ 100W — Triple Output

Model No.	Output	Tol.	R&N	Effi.	Max.
TP-100A	5V, 3.0~15A	±3%	100mV	75%	101W
	12V, 0.4~5.0A	±7%	120mV		
	-5V, 0.0~1.0A	±6%	100mV		
TP-100B	5V, 3.0~15A	±3%	100mV	78%	105W
	12V, 0.4~5.0A	±6%	120mV		
	-12V, 0.0~1.0A	±6%	100mV		
TP-100C	5V, 3.0~15A	±3%	100mV	77%	104W
	15V, 0.4~4.0A	+10%,-6%	150mV		
	-15V, 0.0~1.0A	±6%	100mV		
TP-100D	5V, 3.0~15A	±3%	100mV	78%	105W
	24V, 0.4~3.0A	±8%	150mV		
	12V, 0.0~1.0A	±6%	100mV		

❖ 100W — Quad Output

Model No.	Output	Tol.	R&N	Effi.	Max.
QP-100B	5V, 2.0~10A	±3%	100mV	76%	101W
	12V, 0.3~4.0A	±6%	150mV		
	-12V, 0.15~1.0A	+10%,-6%	150mV		
	-5V, 0.0~1.0A	±5%	100mV		
QP-100C	5V, 2.0~10A	±3%	100mV	77%	101W
	15V, 0.3~3.0A	+6%.-10%	150mV		
	-15V, 0.15~1.0A	±8%	150mV		
	-5V, 0.0~1.0A	±5%	100mV		
QP-100D	5V, 2.0~10A	±3%	120mV	78%	100W
	12V, 0.0~3.0A	±3%	150mV		
	24V, 0.3~2.0A	±6%	200mV		
	-12V, 0.0~1.0A	±5%	150mV		
QP-100F	5V, 2.0~10A	±3%	120mV	78%	103W
	15V, 0.0~3.0A	±3%	180mV		
	24V, 0.3~2.0A	±6%	200mV		
	-15V, 0.0~1.0A	±5%	150mV		
QP-100-3A	5V, 2.0~10A	±3%	100mV	74%	99W
	3.3V, 0.0~10A	±3%	100mV		
	12V, 0.3~3.0A	±6%	150mV		
	-5V, 0.0~1.0A	±5%	150mV		
QP-100-3B	5V, 2.0~10A	±3%	100mV	74%	100W
	3.3V, 0.0~10A	±3%	100mV		
	12V, 0.3~3.0A	±6%	150mV		
	-12V, 0.0~1.0A	±5%	150mV		
QP-100-3C	5V, 2.0~10A	±3%	100mV	75%	101W
	3.3V, 0.0~10A	±3%	100mV		
	15V, 0.3~2.0A	+8%,-6%	150mV		
	-15V, 0.0~1.0A	±5%	150mV		
QP-100-3D	5V, 2.0~10A	±3%	100mV	75%	105W
	3.3V, 0.0~10A	±3%	100mV		
	24V, 0.3~2.0A	±6%	150mV		
	-12V, 0.0~1.0A	±5%	150mV		

150W Triple and Quad Output with PFC Function

CASE: 916B 199x 99x 50 mm

- Universal AC input / Full range
- PF>0.98@115VAC; >0.94@230VAC
- Protections: Short circuit / Overload / Over voltage
- Over temp. protection (option)
- Forced air cooling by built-in DC fan
- CH4 polarity can be reversed for QP-150-3X and QP-150-D/F (option)
- 3 years warranty

AC input voltage range ..... 90~264VAC; 127~370VDC
AC inrush current ..... Cold start, 40A at 230VAC
DC adjustment range ..... CH1: -5~+10% rated output voltage (CH1&2 for QP-150-3X and QP-150D/F)
Overload protection ..... 105~150% hiccup mode, auto-recovery
Over voltage protection ..... 115~135% for CH1 or CH1&2
Withstand voltage ..... I/P-O/P: 3kVAC, I/P-FG: 1.5kVAC, 1 minute
Working temperature ..... -10~60°C (refer to output derating curve)
Safety standards ..... UL60950-1, TUV EN60950-1 approved
EMC standards ..... EN55022 class B, EN61000-4-2,3,4,5,6,8,11, EN61000-3-2,3, ENV50204
Connection ..... 7.62mm pitch terminal block with cover
Packing ..... 0.90kg ; 20pcs / 19.0kg / 1.28CUFT (TP-150)
0.93kg ; 20pcs / 19.6kg / 1.28CUFT (QP-150)

❖ 150W — Triple Output

Model No.	Output	Tol.	R&N	Effi.	Max.
TP-150A	5V, 2.0~20A	±3%	100mV	75%	150W
	12V, 0.4~7.0A	±8%	120mV		
	-5V, 0.0~1.0A	±6%	100mV		
TP-150B	5V, 2.0~20A	±3%	100mV	77%	148W
	12V, 0.4~7.0A	±8%	120mV		
	-12V, 0.0~1.0A	±6%	100mV		
TP-150C	5V, 2.0~20A	±3%	100mV	77%	152W
	15V, 0.4~6.0A	+10%,-6%	150mV		
	-15V, 0.0~1.0A	±6%	100mV		
TP-150D	5V, 2.0~20A	±3%	100mV	78%	154W
	24V, 0.4~4.0A	±8%	150mV		
	12V, 0.0~1.0A	±6%	100mV		

❖ 150W — Quad Output

Model No.	Output	Tol.	R&N	Effi.	Max.
QP-150B	5V, 3.0~15A	±3%	100mV	76%	150W
	12V, 0.4~5.0A	±6%	150mV		
	-12V, 0.3~2.0A	+10%,-6%	150mV		
	-5V, 0.0~1.0A	±5%	100mV		
QP-150C	5V, 3.0~15A	±3%	100mV	77%	153W
	15V, 0.4~4.0A	+6%.-10%	150mV		
	-15V, 0.3~2.0A	±8%	150mV		
	-5V, 0.0~1.0A	±5%	100mV		
QP-150D	5V, 3.0~15A	±3%	120mV	78%	150W
	12V, 0.0~5.0A	±3%	150mV		
	24V, 0.4~3.0A	±6%	200mV		
	-12V, 0.0~1.0A	±5%	150mV		
QP-150F	5V, 3.0~15A	±3%	120mV	78%	152W
	15V, 0.0~5.0A	±3%	150mV		
	24V, 0.4~3.0A	±6%	200mV		
	-15V, 0.0~1.0A	±5%	150mV		
QP-150-3A	5V, 3.0~15A	±3%	100mV	73%	146W
	3.3V, 0.0~15A	±3%	100mV		
	12V, 0.4~5.0A	±6%	150mV		
	-5V, 0.0~1.0A	±5%	150mV		
QP-150-3B	5V, 3.0~15A	±3%	100mV	75%	150W
	3.3V, 0.0~15A	±3%	100mV		
	12V, 0.4~5.0A	±6%	150mV		
	-12V, 0.0~1.0A	±5%	150mV		
QP-150-3C	5V, 3.0~15A	±3%	100mV	74%	152W
	3.3V, 0.0~15A	±3%	100mV		
	15V, 0.4~5.0A	+8%,-6%	150mV		
	-15V, 0.0~1.0A	±5%	150mV		
QP-150-3D	5V, 3.0~15A	±3%	100mV	76%	150W
	3.3V, 0.0~15A	±3%	100mV		
	24V, 0.3~3.0A	±6%	150mV		
	-12V, 0.0~1.0A	±5%	150mV		

200W Quad Output with PFC Function

CASE: 912 215x 115x 50 mm

- Universal AC input / Full range
- PF>0.98@115VAC; >0.95@230VAC
- CH4 polarity can be reversed from"-" to "+" (option)
- CH1,2 can be adjusted from -5~+10%
- PG and PF signal output (option)
- Built-in remote sense for CH1,2
- Protections: Short circuit / Overload / Over voltage / Over temp.
- Forced air cooling by built-in DC fan
- 100% full load burn-in test
- 3 years warranty

AC input voltage range .... 90~264VAC; 127~370VDC
AC inrush current ..... Cold start, 30A at 230VAC
DC adjustment range ..... -5~+10% for CH1 and CH2 output
Overload protection ..... 105%~150% constant current, auto-recovery
Over voltage protection ... 115%~135% rated output voltage for CH1 & CH2
Setup, rise, hold up time . 800ms, 50ms, 24ms at full load and 230VAC
Power good/fail signal ..... 10ms / 1ms (option)
Withstand voltage ..... I/P-O/P: 3kVAC, I/P-FG:1.5kVAC, 1minute
Working temperature ..... -10°C~60°C (refer to output derating curve)
Safety standards ..... UL60950-1, TUV EN60950-1 approved
EMC standards ..... EN55022 class B, EN61000-3-2,3, EN61000-4-2,3,4,5,6,8,11, ENV50204
Connection ..... 9P/ 9.5mm pitch terminal block with cover
Packing ..... 1.2kg ; 12pcs / 15.4kg / 0.92CUFT

Model No.	Output	Tol.	R&N	Effi.	Max.
QP-200D	5V, 3.0~20A	±3%	100mV	75%	203W
	12V, 0.0~7.0A	±3%	150mV		
	24V, 0.4~6.0A	+10%,-6%	150mV		
	-12V, 0.0~1.0A	±6%	150mV		
QP-200F	5V, 3.0~20A	±3%	100mV	75%	203W
	15V, 0.0~6.0A	±3%	150mV		
	24V, 0.4~6.0A	+10%,-6%	150mV		
	-15V, 0.0~1.0A	±6%	150mV		
QP-200-3A	5V, 3.0~20A	±3%	100mV	72%	200W
	3.3V, 0.0~20A	±3%	100mV		
	12V, 0.5~8.0A	+8%,-10%	150mV		
	-5V, 0.0~1.0A	±6%	150mV		
QP-200-3B	5V, 3.0~20A	±3%	100mV	72%	205W
	3.3V, 0.0~20A	±3%	100mV		
	12V, 0.5~8.0A	+8%,-10%	150mV		
	-12V, 0.0~1.0A	±6%	150mV		
QP-200-3C	5V, 3.0~20A	±3%	100mV	72%	210W
	3.3V, 0.0~20A	±3%	100mV		
	15V, 0.5~7.0A	+10%,-6%	150mV		
	-15V, 0.0~1.0A	±6%	150mV		
QP-200-3D	5V, 3.0~20A	±3%	100mV	74%	204W
	3.3V, 0.0~20A	±3%	100mV		
	24V, 0.4~6.0A	+10%,-6%	150mV		
	-12V, 0.0~1.0A	±6%	150mV		
QP-200-3E	5V, 3.0~20A	±3%	100mV	74%	206W
	3.3V, 0.0~20A	±3%	100mV		
	24V, 0.4~6.0A	+10%,-6%	150mV		
	-15V, 0.0~1.0A	±6%	150mV		

375W Quad Output with PFC Function

CASE: 927 280x 127x 63.5 mm

- Universal AC input / Full range
- PF>0.98@115VAC; >0.95@230VAC
- CH3 and CH4 are isolated from other outputs and polarity can be reversed
- CH1,2,3,4 adjustable from -5~+10%
- All outputs are stable within ±1%
- No min. load requirement for CH 2,3,4
- Built-in power good and fail signal output
- Remote sense and ON/OFF control
- Protections: Short circuit / Overload / Over voltage / Over temp.
- Forced air cooling by built-in DC fan
- 100% full load burn-in test
- 3 years warranty

AC input voltage range ..... 85~264VAC; 120~370VDC
AC inrush current ..... Cold start, 45A at 230VAC
DC adjustment range ..... All outputs -5%~+10% for QP-375-5 series, ±10% for QP-375-24 series
Overload protection ..... 105%~135% hiccup mode, auto-recovery
Over voltage protection ..... CH1: 115~135% rated output voltage
Setup, rise, hold up time ..... 800ms, 50ms, 36ms at full load and 230VAC
Withstand voltage ..... I/P-O/P: 3kVAC, I/P-FG:1.5kVAC, 1minute
Working temperature ..... -10°C~60°C (refer to output derating curve)
Safety standards ..... UL60950-1, TUV EN60950-1 approved
EMC standards ..... EN55022 class B, EN61000-3-2,3, EN61000-4-2,3,4,5,6,8,11, ENV50204
Connection ..... 3P/ 9.5mm pitch terminal block for input
10P/ 9.5mm pitch terminal block for output
Packing ..... 2.4kg ; 6pcs / 14.8kg / 1.45CUFT

Model No.	Output	Tol.	R&N	Effi.	Max.
QP-375-5A	5V, 3.5~40A	±1%	100mV	77%	378W
	12V, 0.0~16A	±1%	150mV		
	±12V, 0.0~6.0A	±1%	150mV		
	±12V, 0.0~3.0A	±1%	50mV		
QP-375-5B	5V, 3.5~40A	±1%	100mV	77%	357W
	12V, 0.0~16A	±1%	120mV		
	±12V, 0.0~6.0A	±1%	120mV		
	±5V, 0.0~3.0A	±1%	50mV		
QP-375-5C	5V, 3.5~40A	±1%	100mV	77%	378W
	12V, 0.0~16A	±1%	150mV		
	±15V, 0.0~4.0A	±1%	150mV		
	±15V, 0.0~4.0A	±1%	240mV		
QP-375-5D	5V, 3.5~40A	±1%	100mV	78%	378W
	12V, 0.0~16A	±1%	120mV		
	±12V, 0.0~6.0A	±1%	120mV		
	±24V, 0.0~3.0A	±1%	240mV		
QP-375-5E	5V, 3.5~40A	±1%	100mV	78%	378W
	12V, 0.0~16A	±1%	120mV		
	±24V, 0.0~4.0A	±1%	120mV		
	±24V, 0.0~3.0A	±1%	240mV		
QP-375-24B	24V, 1.0~10A	±1%	240mV	78%	386W
	5V, 0.0~16A	±1%	50mV		
	±12V, 0.0~4.0A	±1%	120mV		
	±12V, 0.0~4.0A	±1%	120mV		
QP-375-24C	24V, 1.0~10A	±1%	240mV	80%	410W
	5V, 0.0~10A	±1%	50mV		
	±15V, 0.0~4.0A	±1%	150mV		
	±15V, 0.0~4.0A	±1%	150mV		

Enclosed-PFC

75~200W Single Output

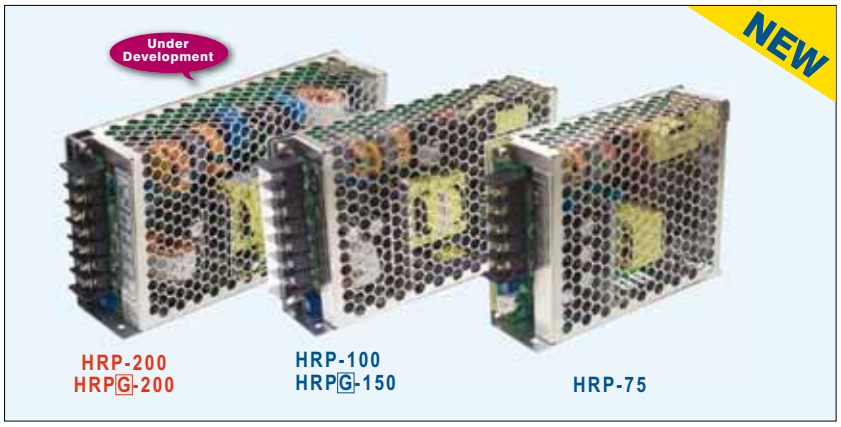

Features

- Universal AC input / Full range
- Withstand 300VAC surge input for 5 seconds
- Built-in active PFC function
- Protections:
  Short circuit / Overload / Over voltage / Over temp. (optional for HRP-75 / HRP-100)
- Built-in constant current limiting circuit
- Built-in remote sense function (HRP□-150 / 200)
- No load power consumption<0.5W (except for HRP-150/200)
- Built-in remote ON/OFF control (except for HRP-150 / 200)
- Cooling by free air convection
- 1U low profile
- 100% full load burn-in test
- 5 years warranty

General Specification (Please refer to www.meanwell.com for detail spec.)

Model No.		HRP-75	HRP-100	HRP□-150	HRP□-200 Under Development
AC input voltage range		85~264VAC, 120~370VDC			
AC inrush current (max.)		Cold start, 65A at 230VAC			Cold start, 70A at 230VAC
DC adjustment range		-5%~+10% rated output voltage		±15% rated output voltage	
Overload protection	Range	105~135%			
	Type	Constant current limiting, auto-recovery			
Over voltage protection		115~145%			
Withstand voltage		I/P - O/P: 3kVAC, I/P - FG: 1.5kVAC, O/P - FG: 0.5kVAC			
Working temperature		-20~+70°C (refer to output derating curve)	-30~+70°C (refer to output derating curve)		
Safety standards		UL60950-1, TUV EN60950-1 approved (HRP-100 / HRP□-200 pending)			
EMC standards		EN55022 class B, EN61000-4-2,3,4,5,6,8,11, EN61000-3-2,3, ENV50204, EN61000-6-2 heavy industry level			
Connection		5P / 9.5mm pitch terminal block with cover	7P / 9.5mm pitch terminal block with cover		
Dimension (LxWxH)(mm)		129x98x38	159x97x38		199x 98x 38
Case No.		903D	901I		902E

75W — HRP-75

Model No.	Output	Tol.	R&N	Effi.
HRP-75-3.3	3.3V, 0~15A	±2.5%	80mV	77.0%
HRP-75-5	5V, 0~15A	±2.5%	80mV	82.5%
HRP-75-7.5	7.5V, 0~10A	±2.5%	100mV	84.0%
HRP-75-12	12V, 0~6.3A	±1.5%	120mV	87.0%
HRP-75-15	15V, 0~5A	±1.5%	150mV	88.0%
HRP-75-24	24V, 0~3.2A	±1.5%	150mV	88.0%
HRP-75-36	36V, 0~2.1A	±1.5%	200mV	89.0%
HRP-75-48	48V, 0~1.6A	±1.5%	240mV	89.0%

150W — HRP□-150

Model No.	Output	Tol.	R&N	Effi.
HRP□-150-3.3	3.3V, 0~30A	±2.5%	80mV	80%
HRP□-150-5	5V, 0~26A	±2.5%	80mV	85%
HRP□-150-7.5	7.5V, 0~20A	±2.5%	100mV	87%
HRP□-150-12	12V, 0~13A	±1.5%	120mV	88%
HRP□-150-15	15V, 0~10A	±1.5%	150mV	88%
HRP□-150-24	24V, 0~6.5A	±1.5%	150mV	88%
HRP□-150-36	36V, 0~4.3A	±1.5%	200mV	89%
HRP□-150-48	48V, 0~3.3A	±1.5%	240mV	89%

□=blank, G; blank: basic function, G: with 5Vsb & no load <0.5W

100W — HRP-100

Model No.	Output	Tol.	R&N	Effi.
HRP-100-3.3	3.3V, 0~20A	±2.5%	80mV	78%
HRP-100-5	5V, 0~17A	±2.5%	80mV	83%
HRP-100-7.5	7.5V, 0~13.5A	±2.5%	100mV	84%
HRP-100-12	12V, 0~8.5A	±1.5%	120mV	88%
HRP-100-15	15V, 0~7A	±1.5%	150mV	88%
HRP-100-24	24V, 0~4.5A	±1.5%	150mV	89%
HRP-100-36	36V, 0~2.9A	±1.5%	200mV	89%
HRP-100-48	48V, 0~2.2A	±1.5%	240mV	90%

200W — Under Development — HRP□-200

Model No.	Output	Tol.	R&N	Effi.
HRP□-200-3.3	3.3V, 0~40A	±2%	80mV	80%
HRP□-200-5	5V, 0~35A	±2%	90mV	84%
HRP□-200-7.5	7.5V, 0~26.7A	±2%	100mV	86%
HRP□-200-12	12V, 0~16.7A	±1%	120mV	88%
HRP□-200-15	15V, 0~13.4A	±1%	150mV	88%
HRP□-200-24	24V, 0~8.4A	±1%	150mV	88%
HRP□-200-36	36V, 0~5.7A	±1%	250mV	89%
HRP□-200-48	48V, 0~4.3A	±1%	250mV	90%

□=blank, G; blank: basic function, G: with 5Vsb & no load <0.5W

Enclosed-PFC

300~600W Single Output

Features

- Universal AC input / Full range
- Withstand 300VAC surge input for 5 seconds
- Built-in active PFC function
- Protections: Short circuit / Overload / Over voltage / Over temp.
- Built-in constant current limiting circuit
- Built-in remote sense function
- No load power consumption<0.5W (HRPG-300 / 450)
- No load power consumption<0.75W (HRPG-600)
- Built-in remote ON/OFF control & 5V / 0.3A standby output (HRPG series)
- Built-in DC OK signal (HRPG-300 / 450 / 600)
- Built-in current sharing (HRPG-600-24 / 36 / 48)
- Forced air cooling by built-in DC fan (HRP☐-300 / 450 / 600)
- 1U low profile (HRP☐-300 / 450)
- 100% full load burn-in test
- 5 years warranty

General Specification (Please refer to www.meanwell.com for detail spec.)

Model No.		HRP☐-300	HRP☐-450 Under Development	HRP☐-600
AC input voltage range		85~264VAC, 120~370VDC		
AC inrush current (max.)		Cold start, 70A at 230VAC		
DC adjustment range		±15% rated output voltage		
Overload Protection	Range	105~135%		
	Type	Constant current limiting, auto-recovery		
Over voltage protection		115~145%		
Withstand voltage		I/P - O/P: 3kVAC, I/P - FG: 1.5kVAC, O/P - FG: 0.5kVAC, 1 minute		
Working temperature		-30~+70°C (refer to output derating curve)		
Safety standards		UL60950-1, TUV EN60950-1 approved (HRP☐-450 pending)		
EMC standards		EN55022 class B, EN61000-4-2,3,4,5,6,8,11, EN61000-3-2,3, ENV50204, EN61000-6-2 heavy industry level		
Connection		7P / 11mm pitch terminal block with cover	3+6P / 10&11mm pitch terminal block with cover	
Dimension (LxWxH)(mm)		199x 105x 41	218x 105x 41	218x 105x 63.5
Case No.		980A	-----	977A

300W HRP☐-300

Model No.	Output	Tol.	R&N	Effi.
HRP☐-300-5	5V, 0~60A	±2.0%	90mV	82%
HRP☐-300-7.5	7.5V, 0~40A	±2.0%	100mV	86%
HRP☐-300-12	12V, 0~27A	±1.0%	120mV	88%
HRP☐-300-15	15V, 0~22A	±1.0%	150mV	88%
HRP☐-300-24	24V, 0~14A	±1.0%	150mV	87%
HRP☐-300-36	36V, 0~9A	±1.0%	250mV	88%
HRP☐-300-48	48V, 0~7A	±1.0%	250mV	89%

☐=blank, G; blank: basic function, G: with 5Vsb & no load <0.5W

450W Under Development HRP☐-450

Model No.	Output	Tol.	R&N	Effi.
HRP☐-450-3.3	3.3V, 0~90A	±2%	80mV	80%
HRP☐-450-5	5V, 0~90A	±2%	80mV	82%
HRP☐-450-7.5	7.5V, 0~60A	±2%	80mV	86%
HRP☐-450-12	12V, 0~37.5A	±1%	120mV	88%
HRP☐-450-15	15V, 0~30A	±1%	150mV	88%
HRP☐-450-24	24V, 0~18.8A	±1%	150mV	88%
HRP☐-450-36	36V, 0~12.5A	±1%	200mV	89%
HRP☐-450-48	48V, 0~9.5A	±1%	240mV	89%

☐=blank, G; blank: basic function, G: with 5Vsb & no load <0.5W

600W HRP☐-600

Model No.	Output	Tol.	R&N	Effi.
HRP☐-600-3.3	3.3V, 0~120A	±2%	100mV	78.5%
HRP☐-600-5	5V, 0~120A	±2%	100mV	82.0%
HRP☐-600-7.5	7.5V, 0~80A	±2%	100mV	87.0%
HRP☐-600-12	12V, 0~53A	±1%	120mV	88.0%
HRP☐-600-15	15V, 0~43A	±1%	150mV	88.0%
HRP☐-600-24	24V, 0~27A	±1%	150mV	88.0%
HRP☐-600-36	36V, 0~17.5A	±1%	200mV	89.0%
HRP☐-600-48	48V, 0~13A	±1%	240mV	89.0%

☐=blank, G; blank: basic function, G: with 5Vsb & no load <0.75W

We are a TQM (Total Quality Management) company and ISO-9001 certified since 1994.

Who can provide you better services and be a trustworthy partner in the power industry?
— "**MEAN WELL**" tries to be —

Best products also need best service.
We have authorized distributors all over the world. They have sufficient stock for your prompt delivery. Also they can offer you technical support & RMA services. Please contact your local distributors for more product information. You can also contact us at info@meanwell.com for information of your local distributors.

Enclosed-PFC

Programmable Single Output

Features

- Universal AC input / Full range
- Built-in active PFC function, PF>0.94
- Protections: Short circuit / Overload / Over voltage / Over temperature
- Output voltage programmable from 20~110% by 1~5.5VDC external control signal (SPV-150/300)
- Output voltage programmable from 20~120% by 1~6VDC external control signal (SPV-1500)
- Forced air cooling by built-in DC fan with fan speed control
- Cooling by free air convection (SPV-150)
- Built-in remote sense and ON/OFF control (SPV-1500)
- Built-in 12V/0.1A auxiliary output and current sharing up to 4500W (SPV-1500)
- 3 years warranty

General Specification (Please refer to www.meanwell.com for detail spec.)

Model No.		SPV-150	SPV-300	SPV-1500
AC input voltage range		88~264VAC, 124~370VDC		90~264VAC, 127~370VDC
AC inrush current (max.)		Cold start, 40A at 230VAC		Cold Start, 60A at 230VAC
DC adjustment range		-15%~+10% rated output voltage		±5% rated output voltage
Overload protection	Range	105~150%	105~135%	
	Type	Constant current limiting, auto-recovery		
Over voltage protection		115~140%		120~140%
Withstand voltage		I/P - O/P: 3kVAC, I/P - FG: 1.5kVAC, O/P - FG: 0.5kVAC, 1 minute		
Working temperature		-20~+65°C (refer to output derating curve)		-20~+70°C
Safety standards		UL60950-1, TUV EN60950-1 approved		
EMC standards		EN55022 class B, EN61000-4-2,3,4,5,6,8,11, EN61000-3-2,3, ENV50204, EN55024, light industry level, criteria A		
Connection		9P / 9.5mm pitch terminal block with cover		3P / 13mm pitch terminal block with cover for input; copper pillars for output
Dimension (LxWxH)(mm)		215x115x50		278x127x83.5
Case No.		912G		943A
Packing		12pcs / 14.0kg		6pcs / 16.6kg

SPV-150 Series

Model No.	Output	Tol.	R&N	Effi.
SPV-150-12	12V, 0~12.5A	±1%	150mV	82%
SPV-150-24	24V, 0~6.25A	±1%	150mV	83%
SPV-150-48	48V, 0~3.125A	±1%	240mV	83%

SPV-300 Series

Model No.	Output	Tol.	R&N	Effi.
SPV-300-12	12V, 0~25A	±1%	150mV	83.5%
SPV-300-24	24V, 0~12.5A	±1%	150mV	85.0%
SPV-300-48	48V, 0~6.25A	±1%	240mV	86.5%

SPV-1500 Series

Model No.	Output	Tol.	R&N	Effi.
SPV-1500-12	12V, 0~125A	±1%	150mV	86.5%
SPV-1500-24	24V, 0~63A	±1%	150mV	90.0%
SPV-1500-48	48V, 0~32A	±1%	200mV	90.0%

Best products also need best service.
We have authorized distributors all over the world. They have sufficient stock for your prompt delivery. Also they can offer you technical support & RMA services. Please contact your local distributors for more product information. You can also contact us at info@meanwell.com for information of your local distributors.

600W Single Output with PFC & Programmable Output Voltage Function

Available by Request

- Output voltage programmable from 20~110% by 1~5.5VDC external control signal
- Universal AC input / full range
- Remote ON/OFF control, remote sense
- DC OK signal output
- Protection: Short circuit / Overload / Over voltage / Over temperature
- DC output models: 12V / 24V / 48V
- Cooling by built-in DC fan
- Parallel operation function
- Dimension (LxWxH): 170x 120x 93mm
- 3 years warranty

U-bracket-PFC

150~500W Single Output

Features

- Universal AC input / Full range
- Built-in active PFC
- Protections: Short circuit / Overload / Over voltage / Over temperature
- Output wattage:
  USP-150: 150W convection
  USP-225: 150W convection, 225W with 18CFM forced air
  USP-350: 300W convection, 350W with 23.5CFM forced air
  USP-500: 400W convection, 500W with 23.5CFM forced air
- High power density: 5.5W/in^3 (USP-150); 4.7W/in^3 (USP-225); 6.32W/in^3 (USP-350); 6.2W/in^3 (USP-500)
- U-bracket low profile: 33mm(USP-150); 38mm(USP-225/300); 41mm(USP-500)
- Built-in remote ON/OFF control, remote sense, DC OK signal (USP-500)
- Optional current sharing(1+1) for 24&48V models(USP-500)
- 3 years warranty

General Specification (Please refer to www.meanwell.com for detail spec.)

Model No.		USP-150 Under Development	USP-225	USP-350	USP-500
AC input voltage range		90~280VAC, 127~396VDC	90~264VAC, 127~370VDC		
AC inrush current (max.)		22A at 115VAC, 44A at 230VAC	15A at 115VAC, 30A at 230VAC	22A at 115VAC, 44A at 230VAC	30A at 115VAC, 50A at 230VAC
DC adjustment range		-----	±10% rated output voltage		
Overload protection	Range	105%~130%	105%~150%	105%~130%	
	Type	Constant current limiting, auto-recovery	Constant current limiting, auto-recovery		Constant current, shut off after 3 sec.
Over voltage protection	Range	110%~135%	110%~135%	110%~140%	115%~135%
	Type	Hiccup mode, auto-recovery	Shut off, AC recycle to re-start	Hiccup mode, auto-recovery	Shut off, AC recycle to re-start
Withstand voltage		I/P - O/P: 4kVAC, I/P - FG: 1.5kVAC, O/P - FG: 0.5kVAC, 1 minute	I/P - O/P: 3kVAC, I/P - FG: 1.5kVAC, O/P - FG: 0.5kVAC, 1 minute		
Working temperature		-30~+70°C	-20~+65°C	-10~+65°C	-20~+70°C
Vibration		10~500Hz, 5G 10min./1cycle, 60min. each along X, Y, Z axes	10~500Hz, 2G 10min./1cycle, 60min. each along X, Y, Z axes		
Safety standards		UL60950-1, TUV EN60950-1 approved; UL1012, EN61347-2-13 (USP-150 only, pending)			
EMC standards		EN55022 class B, EN61000-3-2,3, EN61000-4-2,3,4,5,6,8,11, ENV50204; EN55015 and EN61547, EN61000-6-2 (USP-150 only)			
Connection		5+5Px2/3.9mm pitch, JSP: B5P/B5Px2-VH	20P/2.54mm pitch, Molex 39-29-9206	5+9Px2/3.96mm pitch, JST: B5P/B9Px2-VH	3+8P/8.5mm pitch terminal block with cover
Dimension (LxWxH)(mm)		200x 68x 33	202x 101.5x 38	235.2x 101.5x 38	254x 127x 41

150W — Under Development USP-150

Model No.	Output	Tol.	R&N	Effi.
USP-150-3.3	3.3V, 0~30.0A	±2%	100mV	80%
USP-150-5	5V, 0~26.0A	±2%	100mV	87%
USP-150-12	12V, 0~12.5A	±2%	100mV	88%
USP-150-15	15V, 0~10.0A	±2%	100mV	88%
USP-150-24	24V, 0~6.30A	±2%	100mV	90%
USP-150-36	36V, 0~4.20A	±2%	150mV	90%
USP-150-48	48V, 0~3.20A	±2%	150mV	90%

350W — USP-350

Model No.	Output	Tol.	R&N	Effi.
USP-350-3.3	3.3V, 0~70.0A	±2%	80mV	78%
USP-350-5	5V, 0~70.0A	±2%	80mV	84%
USP-350-12	12V, 0~29.2A	±2%	100mV	88%
USP-350-15	15V, 0~23.4A	±2%	100mV	88%
USP-350-24	24V, 0~14.6A	±2%	150mV	88%
USP-350-48	48V, 0~7.30A	±2%	150mV	89%

225W — USP-225

Model No.	Output	Tol.	R&N	Effi.
USP-225-3.3	3.3V, 0~40.0A	±2%	100mV	72%
USP-225-5	5V, 0~40.0A	±2%	100mV	77%
USP-225-12	12V, 0~18.7A	±2%	100mV	83%
USP-225-15	15V, 0~15.0A	±2%	100mV	84%
USP-225-24	24V, 0~9.40A	±2%	150mV	85%
USP-225-48	48V, 0~4.70A	±2%	250mV	86%

500W — USP-500

Model No.	Output	Tol.	R&N	Effi.
USP-500-5	5V, 0~80.0A	±2%	80mV	85%
USP-500-12	12V, 0~42.0A	±2%	100mV	90%
USP-500-15	15V, 0~33.5A	±2%	100mV	90%
USP-500-24	24V, 0~21.0A	±2%	150mV	89%
USP-500-48	48V, 0~10.5A	±2%	150mV	90%

DIN Series

10~96W Miniature Single Output

Features

- Universal AC input / Full range
- Installed on DIN rail TS35 / 7.5 or 15
- Protections: Short circuit / Overload / Over voltage
- No load power consumption <0.75W (<1W for MDR-100)
- LED indicator for power on
- NEC class 2 / LPS compliant (selected models)
- Built-in active PFC and over temp. protection (MDR-100)
- DC OK signal output (MDR-10/20)
- DC OK relay contact (MDR-40/60/100)
- Cooling by free air convection
- 100% full load burn-in test
- 3 years warranty

General Specification (Please refer to www.meanwell.com for detail spec.)

Model No.	MDR-10	MDR-20	MDR-40	MDR-60	MDR-100
AC input voltage range	85~264VAC, 120~370VDC				
AC inrush current	Cold start, 35A at 115VAC, 70A at 230VAC	Cold start, 20A at 115VAC, 40A at 230VAC	Cold start, 30A at 115VAC, 60A at 230VAC		
DC adjustment range	Fixed	±10% rated output voltage	0 ~ +20% rated output voltage		
Overload protection	>105% hiccup mode, auto-recovery	105%~160% constant current limiting, auto-recovery	105%~150% constant current limiting, auto-recovery		
Over voltage protection	115%~135% rated output voltage		125%~150% rated output voltage		
Setup, rise, hold up time	500ms, 30ms, 50ms at full load and 230VAC				3000ms, 50ms, 50ms
Withstand voltage	I/P-O/P:3kVAC, I/P-FG:1.5kVAC, 1minute				
Working temperature	-20~+70°C (refer to output derating curve)				-10~+60°C
DC OK signal	Open collector	Open collector	Relay contact		
Safety standards	UL508, TUV EN60950-1, UL60950-1(MDR-40/60) approved, NEC class 2 compliant (MDR-10/20, MDR-40-12/24/48, MDR-60-12/24/48, MDR-100-24/48)				
EMC standards	EN55022 class B, EN61000-3-2,-3, ENV50204, EN61000-4-2,3,4,5,6,8,11, EN61204-3, EN61000-6-2 heavy industry level (MDR-40/60/100)				
Connection	I/P: 3 poles, O/P: 3 poles screw DIN terminal		IP: 3 poles, O/P: 6 poles screw DIN terminal		
Dimension (WxHxD)(mm)	22.5x 90x 100		40x 90x 100		55x 90x 100
Packing	72pcs / 13.2kg	72pcs / 14.7kg	42pcs / 13.6kg	42pcs / 14.8kg	30pcs / 13.6kg

MDR-10 Series

Model No.	Output	Tol.	R&N	Effi.
MDR-10-5	5V, 0~2.0A	±5%	80mV	77%
MDR-10-12	12V, 0~0.84A	±3%	120mV	81%
MDR-10-15	15V, 0~0.67A	±3%	120mV	81%
MDR-10-24	24V, 0~0.42A	±2%	150mV	84%

MDR-20 Series

Model No.	Output	Tol.	R&N	Effi.
MDR-20-5	5V, 0~3.0A	±2%	80mV	76%
MDR-20-12	12V, 0~1.67A	±1%	120mV	80%
MDR-20-15	15V, 0~1.34A	±1%	120mV	81%
MDR-20-24	24V, 0~1.00A	±1%	150mV	84%

MDR-40 Series

Model No.	Output	Tol.	R&N	Effi.
MDR-40-5	5V, 0~6.00A	±2%	80mV	78%
MDR-40-12	12V, 0~3.33A	±1%	120mV	86%
MDR-40-24	24V, 0~1.70A	±1%	150mV	88%
MDR-40-48	48V, 0~0.83A	±1%	200mV	88%

MDR-60 Series

Model No.	Output	Tol.	R&N	Effi.
MDR-60-5	5V, 0~10.0A	±2%	80mV	78%
MDR-60-12	12V, 0~5.00A	±1%	120mV	86%
MDR-60-24	24V, 0~2.50A	±1%	150mV	88%
MDR-60-48	48V, 0~1.25A	±1%	200mV	87%

MDR-100 Series

Model No.	Output	Tol.	R&N	Effi.
MDR-100-12	12V, 0~7.5A	±1%	120mV	85%
MDR-100-24	24V, 0~4.0A	±1%	150mV	86%
MDR-100-48	48V, 0~2.0A	±1%	200mV	88%

Energy Saving —
We care about energy saving. This logo represents that this model has "low no load power consumption"!

To satisfy our customers is our goal —
- High Quality
- Low Cost
- Prompt Delivery
- Best Service

DIN Series

15~100W Class II Single Output

Features

- Isolation Class II
- Universal AC input / Full range
- Protections: Short circuit / Overload / Over voltage
- Over temperature protection (DR-100)
- No load power consumption<1W (DR-100)
- No load power consumption<0.5W (DR-15)
- Installed on DIN rail TS35 / 7.5 or 15
- Cooling by free air convection
- LED indicator for power on
- 100% full load burn-in test
- 3 years warranty
- Suitable for building automation and control of household appliance

General Specification (Please refer to www.meanwell.com for detail spec.)

Model No.		DR-15 NEW	DR-30	DR-60	DR-100
AC input voltage range		85~264VAC, 120~370VDC		88~264VAC, 124~370VDC	
AC inrush current (max.)		Cold start, 65A at 230VAC	Cold start, 30A at 230VAC	Cold start, 36A at 230VAC	Cold start, 45A at 230VAC
DC adjustment range		±10% rated output voltage			12V: 12~15V, 15V: 15~18V, 24V: 24~29V
Overload Protection	Range	105%~160%			105%~135%
	Type	constant current limiting, auto-recovery			
Over Voltage Protection	Range	115%~135% rated output voltage			125%~155% rated output voltage
	Type	Shut off, clamp by zener diode	Shut down, re-power on to recover		
Withstand voltage		I/P-O/P: 3kVAC			
Working temperature		-20°C~+60°C (refer to output load derating curve)			
Vibration		10~500Hz, 2G 10 min./1 cycle, period for 60 min. each along X, Y, Z axes			
Safety standards		UL60950-1, TUV60950-1 approved			
EMC standards		EN55022 class B, EN61000-3-2,3, EN61000-6-2, EN61000-4-2,3,4,5,6,8,11, ENV50204, EN61204-3			
Connection		I/P and O/P: 2 poles screw DIN terminal	I/P: 2 poles, O/P: 4 poles screw DIN terminal		
Dimension (WxHxD)(mm)		25x 93x 56	78x 93x 56	78x 93x 56	100x 93x 56
Case No.		985A	918B	918B	970A
Packing		140pcs / 15.0kg	48pcs / 14.0kg	48pcs / 15.4kg	36pcs / 13.6kg

15W — NEW DR-15

Model No.	Output	Tol.	R&N	Effi.
DR-15-5	5V, 0~2.40A	±2%	80mV	77.0%
DR-15-12	12V, 0~1.25A	±1%	120mV	84.0%
DR-15-15	15V, 0~1.00A	±1%	120mV	83.5%
DR-15-24	24V, 0~0.63A	±1%	150mV	85.0%

30W — DR-30

Model No.	Output	Tol.	R&N	Effi.
DR-30-5	5V, 0~3.0A	±2%	80mV	74%
DR-30-12	12V, 0~2.0A	±1%	120mV	81%
DR-30-15	15V, 0~2.0A	±1%	120mV	82%
DR-30-24	24V, 0~1.5A	±1%	150mV	83%

60W — DR-60

Model No.	Output	Tol.	R&N	Effi.
DR-60-5	5V, 0~6.5A	±2%	80mV	76%
DR-60-12	12V, 0~4.5A	±1%	120mV	82%
DR-60-15	15V, 0~4.0A	±1%	120mV	83%
DR-60-24	24V, 0~2.5A	±1%	150mV	84%

100W — DR-100

Model No.	Output	Tol.	R&N	Effi.
DR-100-12	12V, 0~7.5A	±2%	120mV	87%
DR-100-15	15V, 0~6.5A	±1%	120mV	87%
DR-100-24	24V, 0~4.2A	±1%	150mV	89%

We provide specification, drawing, test report and more information, please visit our website —
http://www.meanwell.com

Energy Saving —
We care about energy saving. This logo represents that this model has "low no load power consumption"!

DIN Series

45~480W Single Output

Features

- Universal AC input / Full range (DR-45/75, DRP-240)
  AC input selectable by switch (DR-120, DRP-480S)
  AC input 180~264VAC only (DRP-480)
- Built-in active PFC function, PF>0.95(DRP-240)
- Built-in passive PFC function compliance to EN61000-3-2 (480W models)
- Protections: Short circuit / Overload / Over voltage / Over temperature
- Cooling by free air convection
- Can be installed on DIN rail TS35 / 7.5 or 15
- UL508 (industrial control equipment) listed
- 100% full load burn-in test
- LED indicator for power on
- 3 years warranty

General Specification (Please refer to www.meanwell.com for detail spec.)

Model No.		DR-45	DR-75	DR-120	DRP-240	DRP-480	DRP-480S
AC input voltage range		85~264VAC(DR-45/75, DRP-240); 90~132/180~264VAC selectable by switch (DR-120, DRP-480S); 180~264VAC only (DRP-480)					
AC inrush current (230VAC)		56A	Cold start, 40A at 230VAC		45A	40A	45A
DC adjustment range		±10%	12V: 12~14V, 24V: 24~28V, 48V: 48~53V				
Overload protection		105%~150% constant current limiting, auto-recovery					
Over voltage protection	Range	115%~142% rated output voltage			30~36V for 24V model, 54~60V for 48V model		
	Type	Shut off, AC recycle to re-start					
Over temp. protection		Shut down output voltage, recovers automatically after temperature goes down					
Withstand voltage		I/P-O/P: 3kVAC, I/P-FG: 1.5kVAC, O/P-FG: 0.5kVAC, 1 minute					
Working temperature		-10°C~+50°C	-10°C~+60°C		-10°C~+70°C	-20°C~+70°C	
Safety standards		UL508, TUV EN60950-1 approved (UL60950-1 also for DR-120, DRP-240, DRP-480, DRP-480S)					
EMC standards		EN55022 class B, EN61000-3-2,3, ENV50204, EN61000-4-2,3,4,5,6,8,11, EN61000-6-2 heavy industry level					
Connection		I/P: 3 poles, O/P: 4 poles screw DIN terminal					
Dimension (WxHxD)(mm)		78x 93x 67	55.5x 125.2x 100	65.5x 125.2x 100	125.5x 125.2x 100	227x 125.2x 100	
Case No.		918A	923	921A	922A	930	
Packing		48pcs / 16.1kg	20pcs / 13.0kg	20pcs / 16.5kg	12pcs / 15.5kg	6pcs / 15.0kg	6pcs / 16.6kg

DR-45 Series

Model No.	Output	Tol.	R&N	Effi.
DR-4505	5V, 0~5.0A	±2%	100mV	72%
DR-4512	12V, 0~3.5A	±1%	200mV	77%
DR-4515	15V, 0~2.8A	±1%	240mV	77%
DR-4524	24V, 0~2.0A	±1%	480mV	80%

DR-75 Series

Model No.	Output	Tol.	R&N	Effi.
DR-75-12	12V, 0~6.3A	±2%	100mV	76%
DR-75-24	24V, 0~3.2A	±1%	150mV	80%
DR-75-48	48V, 0~1.6A	±1%	240mV	81%

DR-120 Series

Model No.	Output	Tol.	R&N	Effi.
DR-120-12	12V, 0~10A	±2%	80mV	80%
DR-120-24	24V, 0~5.0A	±1%	80mV	84%
DR-120-48	48V, 0~2.5A	±1%	100mV	85%

DRP-240 Series

Model No.	Output	Tol.	R&N	Effi.
DRP-240-24	24V, 0~10A	±1%	80mV	84%
DRP-240-48	48V, 0~5.0A	±1%	150mV	85%

DRP-480 Series

Model No.	Output	Tol.	R&N	Effi.
DRP-480-24	24V, 0~20A	±1%	120mV	89%
DRP-480-48	48V, 0~10A	±1%	120mV	89%

DRP-480S Series

Model No.	Output	Tol.	R&N	Effi.
DRP-480S-24	24V, 0~20A	±1%	120mV	89%
DRP-480S-48	48V, 0~10A	±1%	120mV	89%

Customer Satisfaction —
Today's effort, tomorrow's reward. Continuously improve CQTS to satisfy customer is our goal.

We provide specification, drawing, test report and more information, please visit our website —
http://www.meanwell.com

To satisfy our customers is our goal —
- High Quality
- Low Cost
- Prompt Delivery
- Best Service

DIN Series

120~960W High Input Voltage

Features

- Input 340~550VAC, 3-phase 4 wires (single phase for DRH-120)
- Protections: Short circuit / Overload / Over voltage / Over temperature
- Built-in constant current limiting circuit
- Cooling by free air convection
- Can be installed on DIN rail TS35 / 7.5 or 15
- UL508 (industrial control equipment) listed (240~960W)
- EN61000-6-2 industrial immunity level
- Optional parallel function (1+1) (960W only)
- 100% full load burn-in test
- LED indicator for power on
- 3 years warranty

General Specification (Please refer to www.meanwell.com for detail spec.)

Model No.		DRH-120	DRT-240	DRT-480	DRT-960
AC input voltage range		340~550VAC, single phase	340~550VAC, 3-phase 4 wires (dual-phase operation possible)		
AC inrush current (max.)		Cold start, 50A at 400VAC			
DC adjustment range		24V: 24~28V, 48V: 48~55V			
Overload protection	Range	105%~160%	105%~150%		105~125%
	Type	Constant current limiting, auto-recovery			Constant current limiting, delay shut off after 3 sec.
Over voltage protection	Range	24V: 30~36V, 48V: 59~66V			
	Type	Shut off, AC recycle to re-start			
Over temperature protection		Shut down output voltage, recovers automatically after temperature goes down			
Withstand voltage		I/P - O/P: 3kVAC, I/P - FG: 1.5kVAC, O/P - FG: 0.5kVAC, 1 minute			
Working temperature		-20~+60°C	-20~+70°C		-20~+60°C
Safety standards		UL60950-1 approved	UL508, UL60950-1, TUV EN60950-1 approved		
EMC standards		EN55022 class B, EN61000-3-2,3, ENV50204, EN61000-4-2,3,4,5,6,8,11, EN61204-3, EN61000-6-2 heavy industry level			
Connection (screw DIN terminal)		I/P: 3 poles, O/P: 4 poles	I/P: 4 poles, O/P: 4 poles		I/P: 4 poles, O/P: 6 poles
Dimension (WxHxD)(mm)		65.5x 125.2x 100	125.5x 125.2x 100	227x 125.2x 100	276x 125.2x 100
Case No.		921	922A	930A	934
Packing		20pcs / 16.0kg	12pcs / 16.6kg	6pcs / 16.0kg	4pcs / 14.2kg

DRH-120 (Single Phase)

Model No.	Output	Tol.	R&N	Effi.
DRH-120-24	24V, 0~5.0A	±1%	80mV	85%
DRH-120-48	48V, 0~2.5A	±1%	80mV	86%

DRT-240 (Three Phase)

Model No.	Output	Tol.	R&N	Effi.
DRT-240-24	24V, 0~10A	±1%	80mV	89%
DRT-240-48	48V, 0~5.0A	±1%	80mV	89%

DRT-480 (Three Phase)

Model No.	Output	Tol.	R&N	Effi.
DRT-480-24	24V, 0~20A	±1%	80mV	89%
DRT-480-48	48V, 0~10A	±1%	80mV	90%

DRT-960 (Three Phase)

Model No.	Output	Tol.	R&N	Effi.
DRT-960-24	24V, 0~40A	±1%	80mV	91%
DRT-960-48	48V, 0~20A	±1%	80mV	92%

We are a TQM (Total Quality Management) company and ISO-9001 certified since 1994.

Best products also need best service.
We have authorized distributors all over the world. They have sufficient stock for your prompt delivery. Also they can offer you technical support & RMA services. Please contact your local distributors for more product information. You can also contact us at info@meanwell.com for information of your local distributors.

Products —
- One Stop Shopping
- Total Solution

Who can provide you better services and be a trustworthy partner in the power industry?
— "**MEAN WELL**" tries to be —

48hrs delivery—
We keep enough stock for 95% of standard models at our 2400m² warehouse. We can arrange prompt delivery within 48hrs.

DIN Series

120~480W Wide Input Range

Features

- Wide input range 180~550VAC
- Protections: Short circuit / Overload / Over voltage / Over temperature
- Cooling by free air convection
- Built-in constant current limiting circuit
- Can be installed on DIN rail TS-35/7.5 or 15
- UL508(industrial control equipment)
- EN61000-6-2(EN50082-2) industrial immunity level
- Built-in DC OK relay contact
- 3 years warranty

General Specification (Please refer to www.meanwell.com for detail spec.)

UL / CUL / TUV / CE pending

Model No.		WDR-120	WDR-240	WDR-480
AC input voltage range		180~550VAC; 254~780VDC		
AC inrush current (max.)		Cold start, 50A at 230VAC		
DC adjustment range		12V: 12~15V (only for WDR-120), 24V: 24~29V, 48V: 48~58V		
Overload protection		105%~150% rated output voltage, constant current limiting, auto-recovery		
Over voltage protection	Range	16~18V for 12V model (only for WDR-120), 31~37V for 24V model, 60~67V for 48V model		
	Type	Shut down o/p voltage, re-power on to recover		
Over temperature protection	Range	85°C±5°C (TSW : detect on heatsink of power switch)		
	Type	Shut down output voltage, recovers automatically after temperature goes down		
Withstand voltage		I/P-O/P:3kVAC I/P-FG:1.5kVAC O/P-FG:0.5kVAC		
Working temperature		-25~+70°C (Refer to output derating curve)		
Safety standards		Design refer to UL508, TUV EN60950-1		
EMC standards		Compliance to EN55011(CISPR11)EN55022 Class B, EN61000-4-2,3,4,5,6,8,11, ENV50204, EN61000-6-2 (EN50082-2), EN61204-3, heavy industry level		
Connection		I/P: 3 poles, O/P: 4 poles screw DIN terminal	I/P: 3 poles, O/P: 6 poles screw DIN terminal	
Dimension (WxHxD)(mm)		40x 125.2x 113.5	63x 125.2x 113.5	85.5x 125.2x 128.5

120W — WDR-120

Model No.	Output	Tol.	R&N	Effi.
WDR-120-12	12V, 0~10A	±1.5%	80mV	88%.
WDR-120-24	24V, 0~5A	±1.0%	80mV	89%.
WDR-120-48	48V, 0~2.5A	±1.0%	80mV	89%.

240W — WDR-240

Model No.	Output	Tol.	R&N	Effi.
WDR-240-24	24V, 0~10A	±1.0%	120mV	90%.
WDR-240-48	48V, 0~5A	±1.0%	120mV	90%.

480W — WDR-480

Model No.	Output	Tol.	R&N	Effi.
WDR-480-24	24V, 0~20A	±1.0%	100mV	94%.
WDR-480-48	48V, 0~10A	±1.0%	120mV	94%.

Q.A.

Who can provide you better services and be a trustworthy partner in the power industry?

— "**MEAN WELL**" tries to be —

To satisfy our customers is our goal —

- High Quality
- Low Cost
- Prompt Delivery
- Best Service

DIN Series

120~480W Slim and High Efficiency

Features

- High efficiency up to 94% (SDR-240/480)
- Universal AC input / Full range
- Built-in active PFC function
- Protections: Short circuit / Overload / Over voltage / Over temperature
- Cooling by free air convection
- Can be installed on DIN rail TS-35/7.5 or 15
- UL508(industrial control equipment) approved
- EN61000-6-2(EN50082-2) industrial immunity level
- Built-in DC OK relay contact
- 150% peak load capability
- Comply with GL and SEMI F47
- Optional current sharing (7+1) (SDR-480P)
- 3 years warranty

General Specification (Please refer to www.meanwell.com for detail spec.)

Model No.		SDR-120 NEW	SDR-240	SDR-480□ NEW
AC input voltage range		88~264VAC; 124~370VDC		90~264VAC; 127~370VDC
AC inrush current (max.)		Cold start, 70A at 230VAC	Cold start, 65A at 230VAC	Cold start, 80A at 230VAC
DC adjustment range		12V: 12~14V (only for SDR-120), 24V: 24~28V, 48V: 48~55V		
Overload protection		Normally works within 110 ~ 150% rated output power for 3 seconds and then shut down output voltage with auto-recovery		
		>150% rated power or short circuit, constant current limiting with auto-recovery within 2 seconds and may cause to shut down if over 2 seconds		
Over voltage protection	Range	14~17V for 12V model(SDR-120 only), 29~33V for 24V model, 56~65V for 48V model		
	Type	Shut down o/p voltage, re-power on to recover	Shut down o/p voltage with auto-recovery	
Over temperature protection	Range	95°C±5°C (TSW : detect on heatsink of power switch)		105°C±5°C (TSW : detect on heatsink of power switch)
	Type	Shut down output voltage, recovers automatically after temperature goes down		
Withstand voltage		I/P-O/P:3kVAC I/P-FG:1.5kVAC O/P-FG:0.5kVAC O/P-DC OK:0.5kVAC		
Working temperature		-25~+70°C (Refer to output derating curve)		
Safety standards		UL508, TUV EN60950-1, GL approved (SDR-120 and SDR-480 pending)		
EMC standards		Compliance to EN55022 Class B, EN61000-4-2,3,4,5,6,8,11, ENV50204, EN61000-6-2 (EN50082-2), EN61204-3, heavy industry level, SEMI F47, GL		
Connection		I/P: 3 poles, O/P: 4 poles screw DIN terminal	I/P: 3 poles, O/P: 6 poles screw DIN terminal	I/P: 3 poles, O/P: 8 poles screw DIN terminal
Dimension (WxHxD)(mm)		40x 125.2x 113.5	63x 125.2x 113.5	85.5x 125.2x 128.5

120W — NEW SDR-120

Model No.	Output	Tol.	R&N	Effi.
SDR-120-12	12V, 0~10A	±1.0%	100mV	89%
SDR-120-24	24V, 0~ 5A	±1.0%	100mV	91%
SDR-120-48	48V, 0~2.5A	±1.0%	120mV	90%

240W — SDR-240

Model No.	Output	Tol.	R&N	Effi.
SDR-240-24	24V, 0~10A	±1.0%	100mV	94%
SDR-240-48	48V, 0~5A	±1.0%	120mV	94%

480W — NEW SDR-480

Model No.	Output	Tol.	R&N	Effi.
SDR-480□-24	24V, 0~20A	±1.0%	100mV	94%
SDR-480□-48	48V, 0~10A	±1.0%	120mV	94%

□=blank, P ; Blank: basic function, P: with parallel function

We provide specification, drawing, test report and more information, please visit our website —
http://www.meanwell.com

Feature Description

SDR family is our new slim DIN rail product series targeting at the growing demand of high performance DIN rail power supply in the market. Featuring up to 94% of extreme high efficiency, they can provide 120W, 240W, or 480W continuously and 150% peak power for 3 seconds up to 60°C by only free air convection. The slim design of 40mm(SDR-120) / 63mm(SDR-240) / 85.5mm(SDR-480) in width helps save the precious space on the rail and also makes it 30.7%, 43% and 51.6% smaller in size compare to its predecessor model. To fulfill the requirements of marine and semi-conductor related usage, the SDR family complies with GL and SEMI F47 norms in addition to UL, CUL, TUV, and CE certificates.

20A Power Supply Redundant Module

CASE: 923C 55.5x 125.2x 100 mm

- Suitable for redundant operation of 24V system
- Installed on DIN rail TS35 / 7.5 or 15
- Relay contact signal output and LED indicator for input failure alarm
- Cooling by free air convection
- 3 years warranty

DC input voltage range .....21~28V, 20A max. x 2 channels
Reverse voltage 30V
DC output current ..... 20A max.
DC output voltage drop ..... 0.5V max.
Input voltage alarm ..... When input is > 20V(±5%) or <30V(±5%), relay contacts
Relay contact rating 30VDC, 1A
Working temperature ..... -20~+70°C
EMC standards ..... EN55022 class B, EN61000-4-2,3,4,5,6,8, ENV50204
Connection ..... I/P: 4 poles, O/P: 2 poles screw DIN terminal, Single output: 4 poles
Packing ..... 0.5Kg ; 20pcs / 11Kg / 1.29CUFT

Model No.	Output	Reverse Voltage	Current
DR-RDN20	24V, 20A	30V max.	20A max.

Feature Description

DR-RDN-20 is a 20A redundancy (decoupling) module for the 24Vdc power system. Containing 2 sets of 20A Or-ing diodes with wonderful heat dissipation deployment, DR-RDN20 offers a safe option of 1+1 redundant set-up. Not only perfectly decouple power sources from each other as well as from the load, DR-RDN-20 also provides users monitoring signals for both input channels through the built-in relays.

DR-UPS40 is a 40A max. DC UPS (battery control) module for the 24Vdc power system. Accompany with external batteries, it can back-up up to 40A of current to critical loads for certain period of time depending on the capacity of batteries. With complete monitoring signals / LED indicators for DC BUS OK, Battery Fail, Battery Discharge, and the repeated Battery Test function to check the situation of external batteries, users can customize their own DC UPS system to back up critical loads and capture the status of the whole system easily.

Block Diagram

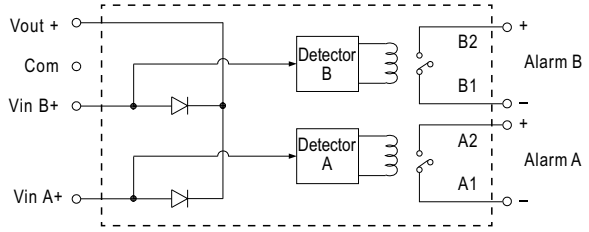

Example of Application

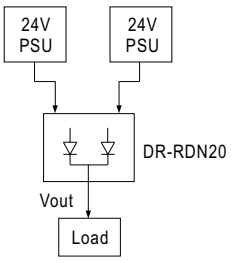

1+1 Redundancy :
Using 1 more PSU as the redundant unit

40A DC UPS Module

CASE: 923D 55.5x 125.2x 100 mm

- Battery controller for DIN rail UPS system
- Parallel connected to DC BUS
- Suitable for 24V system up to 40A
- Installed on DIN Rail TS35 / 7.5 or 15
- Built-in battery test function
- Battery polarity protection
- Relay contact signal output and LED indicator for DC BUS OK, Battery Fail, and Battery Discharge
- Cooling by free air convection
- 3 years warranty

DC input / DC bus ..... 24~29V, 40A max.
Battery input voltage ..... 21~29V
Battery input Current ..... 0~40A
Charge current (typ.) 2A
External battery (typ.) ..... 24V, 4AH / 7AH / 12AH
DC bus ok ..... Relay status : Short when DC voltage between 21~29V(±3%), relay contacts
LED(Green) : DC bus OK : light; DC bus fail : dark
Battery fail ..... Relay status : Short when battery failure is observed through the battery test function, relay contacts
LED(Red) : Battery over-discharge warning or battery broken: light; Battery OK: dark
Battery discharge ..... Relay status : Short when battery in discharge condition, relay contacts
LED(Yellow) : Battery discharging: light; Battery is not discharging or discharging current <2A: dark
Working temperature ..... -20~+70°C
EMC standards ..... EN55022 class B, EN61000-4-2,3,4,5,6,8, ENV50204
Connection ..... I/P: 2 poles, O/P: 2 poles screw DIN terminal, Single output: 6 poles
Packing .....0.55Kg ; 20pcs / 12Kg / 1.29CUFT

Model No.	DC BUS Voltage	DC BUS Current
DR-UPS40	24~29V	40A max.

Block Diagram

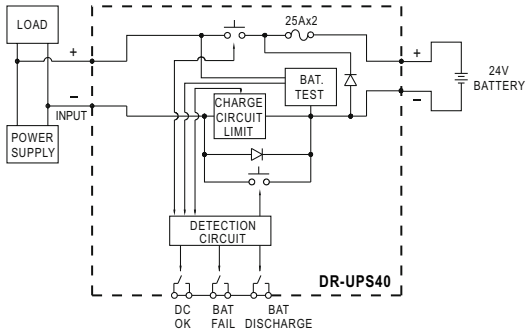

Example of Application

Back up connection for AC interruption

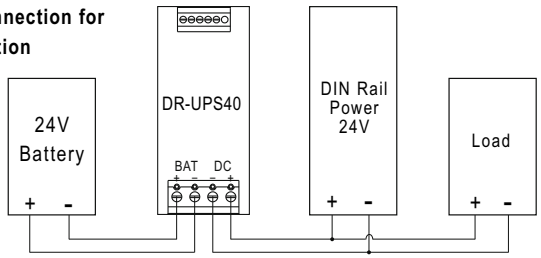

LED Series

18~60W Single Output Class 2 Power Unit

Features

- Universal AC input / Full range (LPV)
- 180~264VAC input only (LPH-18)
- 90~132VAC input only (LPL-18)
- Fully encapsulated with IP67 level
- Protections: Short circuit / Overload / Over voltage
- Over temperature protection (LPH-18 / LPL-18 only)
- Constant voltage design
- Withstand 300VAC surge input for 5 seconds (except for LPL-18 & LPH-18)
- Isolation class II, no F.G.
- Cooling by free air convection
- UL1310 Class 2 power unit
- Pass LPS
- 100% full load burn-in test
- Low cost, high reliability
- Suitable for LED-based decorative / architectural lighting, LED stage and theather lighting
- 2 years warranty

General Specification (Please refer to www.meanwell.com for detail spec.)

Model No.		LPL-18	LPH-18	LPV-20	LPV-35	LPV-60
AC input voltage range		90~132VAC	180~264VAC	90~264VAC		
AC inrush current (max.)		Cold start, 40A at 115VAC	Cold start, 50A at 230VAC	Cold start, 70A at 230VAC	Cold start, 60A at 230VAC	
Overload Protection	Range	>105%		110%~150%		
	Type	Hiccup mode, auto-recovery				
Over voltage protection		115~135% rated output voltage				
Withstand voltage		I/P-O/P: 3kVAC				
Working temperature		-30~+70°C	-25~+70°C	-30~+70°C	-30~+75°C	-30~+70°C
Vibration		10~500Hz, 2G 10 minutes /1 cycle, period for 60 minutes each along X, Y, Z axes				
Safety standards		Design refer to UL1310 class 2, CAN/CSA-C22.2 No. 223-M91, TUV EN60950-1, EN61347-2-13		UL1310 class 2 (except for LPV-60-5), CAN/CSA-C22.2 No. 223-M91 (except for LPV-60-5. LPV-60-48), UL879 (listed in sign components-SAM, LPV-20 only) approved; Design refer to TUV EN60950-1, EN61347-2-13		
EMC standards		FCC part 15 class B	EN55022 class B, EN61000-3-2,3, EN61000-4-2,3,4,5,6,8,11, ENV50204			
Connection	Input	UL rated, 18AWGx2C (30cm)		UL rated, 18AWGx2C (60cm)	UL rated, 18AWGx2C (60cm)	
	Output				UL rated, 16AWGx2C (60cm)	
Dimension (LxWxH)(mm)		140x 30x 20		118x 35x 26	148x 40x 30	162.5x 42.5x 32

LPL-18 Series (C.V. mode)

Model No.	Output	Tol.	R&N	Effi.
LPL-18-12	12V, 0~1.5A	±3%	120mV	80%
LPL-18-24	24V, 0~0.75A	±3%	150mV	83%
LPL-18-36	36V, 0~0.5A	±3%	200mV	84%

LPH-18 Series (C.V. mode)

Model No.	Output	Tol.	R&N	Effi.
LPH-18-12	12V, 0~1.5A	±3%	120mV	78%
LPH-18-24	24V, 0~0.75A	±3%	150mV	82%
LPH-18-36	36V, 0~0.5A	±3%	200mV	83%

LPV-20 Series (C.V. mode)

Model No.	Output	Tol.	R&N	Effi.
LPV-20-5	5V, 0~3.0A	±5%	80mV	77%
LPV-20-12	12V, 0~1.67A	±5%	120mV	81%
LPV-20-15	15V, 0~1.33A	±5%	120mV	83%
LPV-20-24	24V, 0~0.84A	±5%	150mV	83%

LPV-35 Series (C.V. mode)

Model No.	Output	Tol.	R&N	Effi.
LPV-35-5	5V, 0~5.0A (Peak 6A)	±6%	80mV	77%
LPV-35-12	12V, 0~3.0A	±5%	120mV	84%
LPV-35-15	15V, 0~2.4A	±5%	120mV	84%
LPV-35-24	24V, 0~1.5A	±5%	150mV	85%
LPV-35-36	36V, 0~1.0A	±5%	150mV	85%

LPV-60 Series (C.V. mode)

Model No.	Output	Tol.	R&N	Effi.
LPV-60-5	5V, 0~8.00A	±8%	80mV	76%
LPV-60-12	12V, 0~5.00A	±5%	120mV	83%
LPV-60-15	15V, 0~4.00A	±5%	120mV	83%
LPV-60-24	24V, 0~2.50A	±5%	150mV	86%
LPV-60-36	36V, 0~1.67A	±5%	150mV	86%
LPV-60-48	48V, 0~1.25A	±5%	150mV	86%

LED Series

18~60W Single Output Class 2 Power Unit

Features

- Universal AC input / Full range (LPC)
- 180~264VAC input only (LPHC-18)
- 90~132VAC input only (LPLC-18)
- Fully encapsulated with IP67 level
- Protections: Short circuit / Overload / Over voltage / Over temp. (LPLC / LPHC-18 only)
- Constant current design
- Withstand 300VAC surge input for 5 seconds (except for LPLC / LPHC-18)
- Isolation class II, no F.G.
- Cooling by free air convection
- UL1310 Class 2 Power Unit
- Pass LPS
- 100% full load burn-in test
- Low cost, high reliability
- Suitable for LED-based decorative / architectural lighting, LED stage and theater lighting, and LED electronic displays
- 2 years warranty

General Specification (Please refer to www.meanwell.com for detail spec.)

Model No.		LPLC-18 NEW	LPHC-18 NEW	LPC-20	LPC-35	LPC-60
AC input voltage range		90~132VAC	180~264VAC	90~264VAC		
AC inrush current (max.)		Cold start, 40A at 115VAC	Cold start, 50A at 230VAC	Cold start, 70A at 230VAC	Cold start, 60A at 230VAC	
Overload Protection	Range	±5%				
	Type	Constant current limiting, auto-recovery				
Over voltage protection		105~135%		115~135% rated output voltage		
Withstand voltage		I/P-O/P: 3kVAC				
Working temperature		-30~+70°C		-30~+70°C	-30~+75°C	-30~+70°C
Vibration		10~500Hz, 2G 10 minutes /1 cycle, period for 60 minutes each along X, Y, Z axes				
Safety standards		Design refer to UL1310 class 2, CAN/CSA- C22.2 No.223-M91, TUV EN60950-1, EN61347-2-13		UL1310 class 2, CAN/CSA-C22.2 NO. 223-M91(except for LPC-20-350, LPC-35-700, LPC-60-1050/1400), UL879 (listed in sign components -SAM, for LPC-20 only) approved; design refer to TUV EN60950-1, EN61347-2-13		
EMC standards		FCC part 15 class A	EN55022 class A	EN55022 class B, EN61000-3-2,3, EN61000-4-2,3,4,5,6,8,11, ENV50204		
Connection	Input	UL rated, 18AWGx2C (30cm)		UL rated, 18AWGx2C (60cm)	UL rated, 18AWGx2C (60cm)	
	Output				UL rated, 16AWGx2C (60cm)	
Dimension (LxWxH)(mm)		140x 30x 20		118x 35x 26	148x 40x 30	162.5x 42.5x 32
Packing		0.175kg; 70pcs / 13.3kg		0.22kg ; 60pcs / 14.2kg	0.34kg ; 40pcs / 14.6kg	0.4kg ; 32pcs / 13.8kg

LPLC-18 Series (C.C. mode)

Model No.	Output	Tol.	R&N	Effi.
LPLC-18-350	6~48V, 350mA	±5%	300mV	82%
LPLC-18-700	6~25V, 700mA	±5%	250mV	80%

LPHC-18 Series (C.C. mode)

Model No.	Output	Tol.	R&N	Effi.
LPHC-18-350	6~48V, 350mA	±5%	300mV	80%
LPHC-18-700	6~25V, 700mA	±5%	250mV	80%

LPC-20 Series (C.C. mode)

Model No.	Output	Tol.	R&N	Effi.
LPC-20-350	3~48V, 350mA	±5%	200mV	83%
LPC-20-700	3~30V, 700mA	±5%	200mV	83%

LPC-35 Series (C.C. mode)

Model No.	Output	Tol.	R&N	Effi.
LPC-35-700	9~48V, 700mA	±5%	200mV	85%
LPC-35-1050	9~30V, 1050mA	±5%	200mV	85%
LPC-35-1400	9~24V, 1400mA	±5%	200mV	85%

LPC-60 Series (C.C. mode)

Model No.	Output	Tol.	R&N	Effi.
LPC-60-1050	9~48V, 1050mA	±5%	200mV	87%
LPC-60-1400	9~42V, 1400mA	±5%	200mV	85%
LPC-60-1750	9~34V, 1750mA	±5%	200mV	87%

LED Series

30~60W Single Output Class 2 Power Unit

▲ELN-30

▲ELN-60

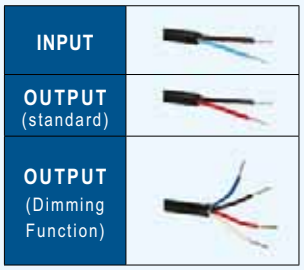

Features

- Universal AC input / Full range
- Fully isolated plastic case with IP64 level
- Built-in constant current limiting circuit with adjustable OCP level
- Protections: Short circuit / Overload / Over voltage
- Optional dimming function: 1.1~10VDC(D type) or PWM(P type) controlled
- UL1310 Class 2 power unit
- Pass LPS
- Cooling by free air convection
- Suitable for LED related and moving sign applications
- 2 years warranty

General Specification (Please refer to www.meanwell.com for detail spec.)

Model No.		ELN-30	ELN-60
AC input voltage range		90~264VAC, 127~370VDC	
AC inrush current (max.)		Cold start, 60A at 230VAC	
DC adjustment range		±10% rated output voltage	
Current adjustment range		75~103% rated output current adjustable by internal potential meter	
Overload protection		95%~110% constant current limiting, auto-recovery	95%~130% constant current limiting, auto-recovery
Over voltage protection	Range	110%~150% rated output voltage	
	Type	Shut down o/p voltage, re-power on to restart	
Withstand voltage		I/P-O/P: 3kVAC	
Working temperature		-20~+60°C (refer to output derating curve)	
Vibration		10~500Hz, 2G 10min/1 cycle, period for 60 min each along X, Y, Z axes	
Safety standards		UL1310 Class 2, CAN/CSA-C22.2 No. 223-M91 (except for 48V) approved; design refer toTUV EN60950-1, EN61347-2-13	
EMC standards		EN55022 class B, EN61000-3-2,3, EN61000-4-2,3,4,5,6,8,11, ENV50204	
Connection		Input/Output: UL rated, 18AWGx2C (30cm); Output(with optional dimming function): 18AWGx4C (30cm)	
Dimension (LxWxH)(mm)		145x 47x 30	181x 61.5x 35
Case No.		964A	960A
Packing		0.26kg ; 60pcs / 16.6kg / 1.25CUFT	0.4kg ; 24pcs / 11.0kg / 0.75CUFT

30W — ELN-30

Model No.	Output	Tol.	R&N	Effi.
ELN-30-5	5V, 0~5.0A	±5%	80mV	75%
ELN-30-9	9V, 0~3.4A	±5%	100mV	80%
ELN-30-12	12V, 0~2.5A	±5%	120mV	82%
ELN-30-15	15V, 0~2.0A	±5%	120mV	82%
ELN-30-24	24V, 0~1.25A	±5%	150mV	85%
ELN-30-27	27V, 0~1.12A	±5%	150mV	85%
ELN-30-48	48V, 0~0.63A	±5%	250mV	87%

60W — ELN-60

Model No.	Output	Tol.	R&N	Effi.
ELN-60-9	9V, 0~5.0A	±5%	120mV	82%
ELN-60-12	12V, 0~5.0A	±5%	120mV	85%
ELN-60-15	15V, 0~4.0A	±5%	150mV	86%
ELN-60-24	24V, 0~2.5A	±5%	150mV	87%
ELN-60-27	27V, 0~2.3A	±5%	200mV	87%
ELN-60-48	48V, 0~1.3A	±5%	250mV	88%

Dimming Control (optional)

Through the dimming function, output current of ELN series can be adjusted to reduce the energy consumption or adjust the brightness of LEDs connecting to it. Two kinds of control signal are accepted: 1.1~10VDC (D-type option) or PWM signal (P-type option).

D Type:
1.1~10Vdc external control signal

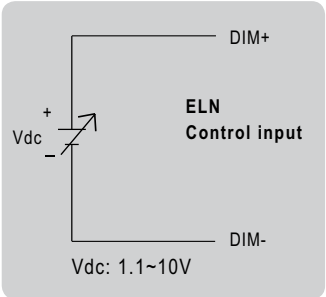

Order No.: ELN-30-5D

P Type:
PWM control signal

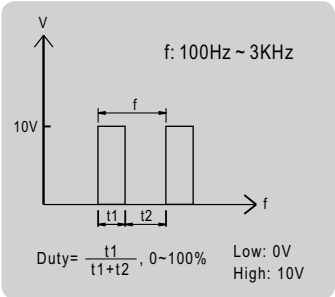

Order No.: ELN-30-5P

LED Series

20~96W Single Output Class 2 with PFC

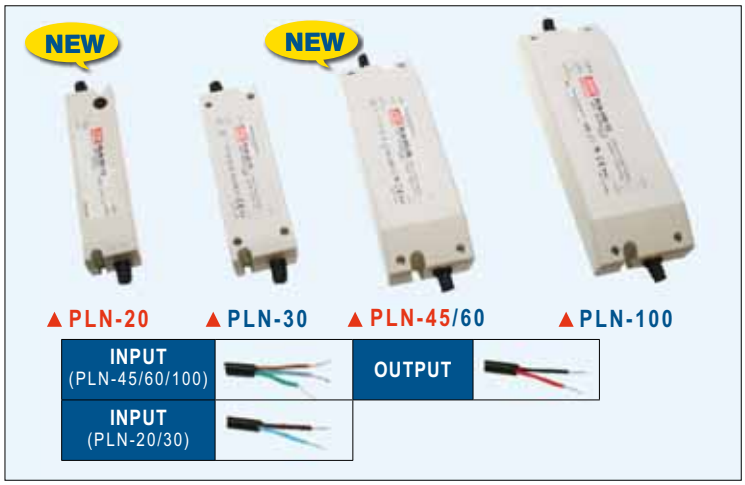

Features

- Universal AC input (up to 295VAC) / Full range
- Fully isolated plastic case with IP64 level
- Built-in active PFC function, PF>0.9 for 75% of load or higher
- Protections: Short circuit / Overload / Over voltage / Over temperature
- Built-in constant current limiting circuit
- User adjustable output voltage (except for PLN-20) and constant current level
- UL1310 Class 2 power unit
- Pass LPS
- Cooling by free air convection
- 100% full load burn-in test
- Suitable for LED lighting and moving sign applications
- 2 years warranty

General Specification (Please refer to www.meanwell.com for detail spec.)

Model No.	PLN-20 NEW	PLN-30	PLN-45 NEW	PLN-60	PLN-100
AC input voltage range	90~277VAC	90~295VAC; 127~417VDC			
AC inrush current (max.)	Cold start, 40A at 230VAC				
DC adjustment range	None	95%~108% rated output voltage adjustable by internal potential meter			85%~100% rated output voltage
Current adjustment range	75% ~ 100%	75%~ 103% rated output current adjustable by internal potential meter			
Overload protection	95%~110% constant current limiting, auto-recovery	100%~110% constant current limiting, auto-recovery	95%~110% constant current limiting, auto-recovery		95%~102% constant current limiting, auto-recovery
Over voltage protection	105%~142% rated output voltage	110%~155% rated output voltage	115%~140% rated output voltage		107%~135% rated output voltage
Setup, rise, hold up time	2300ms, 150ms at full load and 230VAC, no hold up time	1500ms (setup time) at full load and 230VAC, no hold up time			1200ms, 80ms, 60ms at full load and 230VAC
Withstand voltage	I/P-O/P: 3.75kVAC				
Working temperature	-30~+60°C	-30~+50°C (refer to output derating curve)			
Safety standards	UL1310 Class 2, CAN/CSA-C22.2 No.223-M91 (except for 48V), EN61347-1, EN61347-2-13, UL879 (listed in sign components manual – SAM, except for PLN-20) approved ; UL60950-1, TUV EN60950-1 approved for PLN-100 only				
EMC standards	EN55015, EN55022 class B(PLN-60/100 only), EN61000-3-2,3, EN61000-4-2,3,4,5,6,8,11, ENV50204, EN61547				
Connection – Input	UL rated, 18AWGx2C (32cm)		UL rated, 18AWGx3C (30cm)		UL rated, 18AWGx3C (31cm)
Connection – Output			UL rated, 18AWGx2C (30cm)		UL rated, 18AWGx2C (31cm)
Dimension (LxWxH)(mm)	147x 37x 28	145x 47x 30	181x 61.5x 35		200x 70.5x 35
Packing	60pcs / 12.8kg	60pcs / 14.2kg	24pcs / 13.0kg		20pcs / 12.5kg

PLN-20 Series

NEW

Model No.	Output	Tol.	R&N	Effi.
PLN-20-12	12V, 0~1.6A	±10%	2.5V	80%
PLN-20-18	18V, 0~1.1A	±10%	3.0V	81%
PLN-20-24	24V, 0~0.8A	±10%	3.0V	82%
PLN-20-36	36V, 0~0.55A	±10%	3.0V	83%
PLN-20-48	48V, 0~0.42A	±10%	3.8V	84%

PLN-30 Series

Model No.	Output	Tol.	R&N	Effi.
PLN-30-9	9V, 0~3.3A	±10%	2.6V	80%
PLN-30-12	12V, 0~2.5A	±10%	2.0V	83%
PLN-30-15	15V, 0~2.0A	±10%	2.6V	84%
PLN-30-20	20V, 0~1.5A	±10%	2.6V	84%
PLN-30-24	24V, 0~1.25A	±10%	2.6V	85%
PLN-30-27	27V, 0~1.12A	±10%	2.3V	85%
PLN-30-36	36V, 0~0.84A	±10%	4.5V	86%
PLN-30-48	48V, 0~0.63A	±10%	3.7V	86%

PLN-45 Series

NEW

Model No.	Output	Tol.	R&N	Effi.
PLN-45-12	12V, 0~3.8A	±10%	2.0V	81.5%
PLN-45-15	15V, 0~3.0A	±10%	2.4V	84.5%
PLN-45-20	20V, 0~2.3A	±10%	1.8V	88.5%
PLN-45-24	24V, 0~1.9A	±10%	2.7V	89.0%
PLN-45-27	27V, 0~1.7A	±10%	2.7V	89.0%
PLN-45-36	36V, 0~1.25A	±10%	3.6V	89.0%
PLN-45-48	48V, 0~0.95A	±10%	4.6V	89.5%

PLN-60 Series

Model No.	Output	Tol.	R&N	Effi.
PLN-60-12	12V, 0~5.0A	±10%	2.0V	85.0%
PLN-60-15	15V, 0~4.0A	±10%	2.4V	86.0%
PLN-60-20	20V, 0~3.0A	±10%	1.8V	87.5%
PLN-60-24	24V, 0~2.5A	±10%	2.7V	88.0%
PLN-60-27	27V, 0~2.3A	±10%	2.7V	88.0%
PLN-60-36	36V, 0~1.7A	±10%	3.6V	89.0%
PLN-60-48	48V, 0~1.3A	±10%	4.6V	89.0%

PLN-100 Series

Model No.	Output	Tol.	R&N	Effi.
PLN-100-12	12V, 0~5.00A	±3%	150mV	86%
PLN-100-15	15V, 0~5.00A	±3%	150mV	88%
PLN-100-20	20V, 0~4.80A	±3%	150mV	90%
PLN-100-24	24V, 0~4.00A	±3%	150mV	90%
PLN-100-27	27V, 0~3.55A	±3%	150mV	90%
PLN-100-36	36V, 0~2.65A	±2%	150mV	90%
PLN-100-48	48V, 0~2.00A	±2%	200mV	89%

LED Series 30~96W Single Output Class 2 with PFC

Features

- Universal AC input / Full range
- Fully isolated plastic case with screw terminal style of I/O
- Built-in constant current limiting circuit
- Adjustable output voltage and current level
- Built-in active PFC function, PF>0.9 for 75% of load or higher
- Cooling by free air convection
- UL1310 Class 2 power unit
- Pass LPS
- Protections: Short circuit / Overload / Over voltage / Over temperature
- 100% full load burn-in test
- Suitable for LED lighting and moving sign applications
- 2 years warranty

General Specification (Please refer to www.meanwell.com for detail spec.)

Model No.	PLC-30	PLC-45	PLC-60	PLC-100
AC input voltage range	90~264VAC; 127~370VDC			
AC inrush current (max.)	Cold start, 40A at 230VAC			
DC adjustment range	95%~108% rated output voltage adjustable by internal potential meter			85%~100% rated output voltage
Current adjustment range	75%~103% rated output current adjustable by internal potential meter			75~100% rated output voltage
Overload protection	100%~110% constant current limiting, auto-recovery	95%~110% constant current limiting, auto-recovery		95%~102% constant current limiting, auto-recovery
Over voltage protection	110%~155% rated output voltage	115%~140% rated output voltage		107%~135% rated output voltage
Setup time	1500ms at full load and 230VAC			1200ms at full load and 230VAC
Withstand voltage	I/P-O/P: 3.75kVAC			
Working temperature	-30~+50°C (refer to output derating curve)			
Safety standards	UL1310 Class 2, CAN/CSA-C22.2 No.223-M91 (except for 48V), EN61347-1, EN61347-2-13 approved; UL60950-1, TUV EN60950-1, UL879 (listed in Sign Components Manual – SAM) approved for PLC-100			
EMC standards	EN55015, EN55022 class B (PLC-45/60/100), EN61000-3-2 class C, EN61000-4-2,3,4,5,6,8,11, ENV50204, EN61547			
Connection (Input / Output)	2+2P screw terminal block	3+2P screw terminal block		
Dimension (LxWxH)(mm)	160x 46x 30	181.5x 62x 35		200.5x 70.5x 35
Packing	0.2kg ; 70pcs / 15kg / 0.96CUFT	0.41kg ; 30pcs / 13.3kg / 0.67CUFT		0.52kg ; 25pcs / 14.0kg / 0.65CUFT

30W — PLC-30

Model No.	Output	Tol.	R&N	Effi.
PLC-30-9	9V, 0~3.3A	±10%	2.6V	80%
PLC-30-12	12V, 0~2.5A	±10%	2.0V	83%
PLC-30-15	15V, 0~2.0A	±10%	2.6V	84%
PLC-30-20	20V, 0~1.5A	±10%	2.6V	84%
PLC-30-24	24V, 0~1.25A	±10%	2.4V	85%
PLC-30-27	27V, 0~1.12A	±10%	2.3V	85%
PLC-30-36	36V, 0~0.84A	±10%	3.6V	86%
PLC-30-48	48V, 0~0.63A	±10%	3.7V	86%

60W — PLC-60

Model No.	Output	Tol.	R&N	Effi.
PLC-60-12	12V, 0~5.0A	±10%	2.0V	85.0%
PLC-60-15	15V, 0~4.0A	±10%	2.4V	86.0%
PLC-60-20	20V, 0~3.0A	±10%	1.8V	87.5%
PLC-60-24	24V, 0~2.5A	±10%	2.4V	88.0%
PLC-60-27	27V, 0~2.3A	±10%	2.7V	88.0%
PLC-60-36	36V, 0~1.7A	±10%	3.6V	89.0%
PLC-60-48	48V, 0~1.3A	±10%	4.6V	89.0%

45W — PLC-45

Model No.	Output	Tol.	R&N	Effi.
PLC-45-12	12V, 0~3.8A	±10%	2.0V	86.0%
PLC-45-15	15V, 0~3.0A	±10%	2.4V	86.5%
PLC-45-20	20V, 0~2.3A	±10%	1.8V	88.5%
PLC-45-24	24V, 0~1.9A	±10%	2.4V	89.0%
PLC-45-27	27V, 0~1.7A	±10%	2.7V	89.0%
PLC-45-36	36V, 0~1.25A	±10%	3.6V	89.0%
PLC-45-48	48V, 0~0.95A	±10%	4.6V	89.5%

96W — PLC-100

Model No.	Output	Tol.	R&N	Effi.
PLC-100-12	12V, 0~5.00A	±3%	150mV	86%
PLC-100-15	15V, 0~5.00A	±3%	150mV	88%
PLC-100-20	20V, 0~4.80A	±3%	150mV	90%
PLC-100-24	24V, 0~4.00A	±3%	150mV	90%
PLC-100-27	27V, 0~3.55A	±3%	150mV	90%
PLC-100-36	36V, 0~2.65A	±2%	150mV	90%
PLC-100-48	48V, 0~2.00A	±2%	200mV	89%

60W, 75W Single Output LED Power Supply

- Universal AC input (up to 295VAC)
- Protections:
  Short circuit / Overload / Over voltage / Over temperature
- Built-in active PFC function, PF>0.9 for 60% of load or higher
- IP66 design
- UL1310 Class2 power unit
- Cooling by free air convection
- Suitable for LED lighting and moving sign applications
- 3 years warranty

UL / CUL / TUV / CE pending

CEN-60
162x 61.5x 39 mm

CEN-75
162x 61.5x 39 mm

AC input voltage range ..... 90~295VAC; 127~417VDC
AC inrush current ..... Cold start, 40A at 230VAC
DC adjustment range ..... ±10% rated output voltage
Current adjustment range ..... 75%~100% rated output current
Overload protection ..... 95% ~110% constant current, auto-recovery
Over voltage protection ..... 110%~140% shut off, re-power on to recovery
Setup time ..... 3000ms at full load and 230VAC
Withstand voltage ..... I/P - O/P: 3.75kVAC, I/P-FG: 1.88kVAC, O/P-FG: 0.5kVAC
Working temperature ..... -30ºC~+70ºC (refer to output derating curve)
Safety standards ..... Design refer to UL1310 class 2, UL8750, UL879(SAM list), TUV EN61347-1, EN61347-2-13, CAN/CSA-C22.2 No.223-M91 (except for 48V&54V)
EMC standards ..... EN55015, EN61000-3-2 Class C, EN61000-4-2,3,4,5,6,8,11, ENV50204, EN61547

❖ CEN-60 series

Model No.	Output	Tol.	R&N	Effi.
CEN-60-12	12V, 0~5.0A	±10%	2.0V	86%
CEN-60-15	15V, 0~4.0A	±10%	2.4V	87%
CEN-60-20	20V, 0~3.0A	±10%	1.8V	90%
CEN-60-24	24V, 0~2.5A	±10%	2.7V	90%
CEN-60-30	30V, 0~2.0A	±10%	3.0V	90%
CEN-60-36	36V, 0~1.7A	±10%	3.6V	90%
CEN-60-42	42V, 0~1.45A	±10%	4.0V	90%
CEN-60-48	48V, 0~1.3A	±10%	4.6V	91%
CEN-60-54	54V, 0~1.15A	±10%	5.0V	91%

❖ CEN-75 series

Model No.	Output	Tol.	R&N	Effi.
CEN-75-15	15V, 0~5.0A	±10%	2.4V	88%
CEN-75-20	20V, 0~3.75A	±10%	1.8V	90%
CEN-75-24	24V, 0~3.15A	±10%	2.7V	90%
CEN-75-30	30V, 0~2.5A	±10%	3.0V	90%
CEN-75-36	36V, 0~2.1A	±10%	3.6V	90%
CEN-75-42	42V, 0~1.8A	±10%	4.0V	90%
CEN-75-48	48V, 0~1.57A	±10%	4.6V	91%
CEN-75-54	54V, 0~1.4A	±10%	5.0V	91%

We provide specification, drawing, test report and more information, please visit our website —
http://www.meanwell.com

100W Single Output LED Power Supply

UL / CUL / TUV / CE pending

172x 61.5x 39 mm

- Universal AC input (up to 295VAC)
- Protections:
  Short circuit / Overload / Over voltage / Over temperature
- Built-in active PFC function
- IP66 design
- UL1310 Class 2 power unit
- Cooling by free air convection
- Suitable for LED lighting and moving sign applications
- 3 years warranty

AC input voltage range ..... 90~295VAC; 127~417VDC
AC inrush current ..... Cold start, 40A at 230VAC
DC adjustment range ..... ±10% rated output voltage
Current adjustment range.... 75%~100% rated output current
Overload protection ..... 95%~110% constant current, auto-recovery
Over voltage protection ..... 110%~135% shut off, re-power on to recover
Setup time ..... 3000ms at full load and 230VAC
Withstand voltage ..... I/P - O/P: 3.75kVAC, I/P-FG: 1.88kVAC, O/P-FG: 0.5kVAC
Working temperature ..... -30ºC~+70ºC (refer to output derating curve)
Safety standards ..... Design refer to UL1310 class 2, UL8750, UL879(SAM list), TUV EN61347-1, EN61347-2-13, CAN/CSA-C22.2 No.223-M91 (except for 48V&54V)
EMC standards ..... EN55015, EN61000-3-2 Class C, EN61000-4-2,3,4,5,6,8,11, ENV50204, EN61547

Model No.	Output	Tol.	R&N	Effi.
CEN-100-20	20V, 0~4.8A	±10%	1.8V	90%
CEN-100-24	24V, 0~4.0A	±10%	2.7V	90%
CEN-100-30	30V, 0~3.2A	±10%	3.0V	90%
CEN-100-36	36V, 0~2.65A	±10%	3.6V	90%
CEN-100-42	42V, 0~2.28A	±10%	4.0V	90%
CEN-100-48	48V, 0~2.0A	±10%	4.6V	91%
CEN-100-54	54V, 0~1.77A	±10%	5.0V	91%

150W U-Bracket Single Output LED Power Supply

UL / CUL / TUV / CE pending

219x 68x 33 mm

- Universal AC input / Full range (up to 300VAC)
- Built-in active PFC compliance to EN61000-3-2 class C
- Protections:
  Short circuit / Overload / Over voltage / Over temperature
- Cooling by free air convection
- U-brcaket low profile: 33mm
- 3 years warranty

AC input voltage range ..... 90~300VAC; 127~424VDC
AC inrush current ..... Cold start, 65A at 230VAC
Overload protection ..... 105~130% constant current, auto-recovery
Over voltage protection ..... 110%~135% hiccup mode, auto-recovery
Setup, rise, hold up time .... 2000ms, 100ms, 16ms at full load and 230VAC
Withstand voltage ..... I/P - O/P: 4kVAC, I/P-FG: 1.5kVAC, O/P-FG: 0.5kVAC
Working temperature ..... -30ºC~+70ºC (refer to output derating curve)
Safety standards ..... Design refer to UL1012, UL60950-1, CAN/CSA-C22.2 No.223-M91 (except for 48V), TUV EN60950-1, EN61347-1, EN61347-2-13
EMC standards ..... EN55015, EN55022 class B, EN61000-3-2 Class C, EN61547, ENV50204, EN61000-4-2,3,4,5,6,8,11

Model No.	Output	Tol.	R&N	Effi.
ULP-150-12	12V, 0~12.5A	±2%	100mV	89%
ULP-150-15	15V, 0~10.0A	±2%	100mV	88%
ULP-150-24	24V, 0~6.30A	±2%	150mV	90%
ULP-150-36	36V, 0~4.20A	±2%	200mV	90%
ULP-150-48	48V, 0~3.20A	±2%	200mV	90%

LED Series

60~150W Single Output with PFC

Features

- Universal AC input / Full range
- Protections: Short circuit / Overload / Over voltage / Over temp.
- Built-in active PFC function, PF>0.9 for 75% of load or higher
- IP67 / IP65 design for indoor or outdoor installations (except for C type)
- Output current adjustable through output cable or internal potential meter (CLG-150)
- UL1310 class2 power unit (CLG-60&100)
- Cooling by free air convection
- Suitable for LED lighting and moving sign applications
- Optional model for CLG-150
  A-Type: IP65 rated. Output and constant current level can be adjusted through internal potential meter
  B-Type: IP67 rated and constant current level adjustable through output cable (optional)
  C-Type: Non IP. Terminal block for I/O connection (optional)
  Blank-Type: IP67 rated, cable for I/O connection (optional)
- 3 years warranty

General Specification (Please refer to www.meanwell.com for detail spec.)

Model No.		CLG-60	CLG-100	CLG-150
AC input voltage range		90~295VAC; 127~417VDC		
AC inrush current (max.)		Cold start, 40A at 230VAC		Cold start, 65A at 230VAC
DC adjustment range		Fixed. Can be modified between 90%~110% (CLG-60) or 85%~100% (CLG-100) rated output voltage		A and C type can be adjusted by internal potential meter
Current adjustment range		Fixed. Can be modified between 75%~103% rated output current		Can be adjusted by internal potential meter (A and C type) or through output cable (B type)
Overload protection		95%~110% constant current, auto-recovery	95%~102% constant current, auto-recovery	95%~108% constant current limiting, auto-recovery
Over voltage protection		110%~140%	107%~135%	110%~142% rated output voltage
Setup, rise, hold up time		3000ms(setup time), no hold up time	1200ms, 80ms, 60ms at full load and 230VAC	3000ms, 80ms, 50ms at full load and 230VAC
Withstand voltage		I/P-O/P: 3.75kVAC, I/P-FG: 1.88kVAC, O/P-FG: 0.5kVAC		
Working temperature		-30~+70°C (refer to output derating curve)		
Safety standards		UL1310 Class 2, EN61347-1, EN61347-2-13, CAN/CSA-C22.2 No.223-M91 (except for 48V), UL879 (SAM list) approved; TUV EN60950-1, UL60950-1 also for CLG-100		UL60950-1, UL1012, TUV EN60950-1, EN61347-1, EN61347-2-13 approved
EMC standards		EN55015, EN55022 class B, EN61000-3-2 class C, EN61000-4-2,3,4,5,6,8,11, ENV50204, EN61547		
Connection	Input	UL rated, 18AWGx3C (30cm)		UL rated, 18AWGx3C (30cm); Terminal block for C type option
	Output	UL rated, 18AWGx2C (30cm)		☐= A & Blank type: 14AWGx2C (30cm) ☐= B type: 14AWGx2C (30cm)+18AWGx2C (30cm) ☐= C type: Terminal block
Dimension (LxWxH)(mm)		195.6x 61.5x 38.8	222x 68x 38.8	222.2x 68x 38.8

60W (Class 2) — CLG-60

Model No.	Output	Tol.	R&N	Effi.
CLG-60-12	12V, 0~5.0A	±10%	2.0V	85.0%
CLG-60-15	15V, 0~4.0A	±10%	2.4V	86.0%
CLG-60-20	20V, 0~3.0A	±10%	1.8V	87.5%
CLG-60-24	24V, 0~2.5A	±10%	2.7V	88.0%
CLG-60-27	27V, 0~2.3A	±10%	2.7V	88.0%
CLG-60-36	36V, 0~1.7A	±10%	3.6V	89.0%
CLG-60-48	48V, 0~1.3A	±10%	4.6V	89.0%

96W (Class 2) — CLG-100

Model No.	Output	Tol.	R&N	Effi.
CLG-100-12	12V, 0~5.00A	±3%	150mV	86%
CLG-100-15	15V, 0~5.00A	±3%	150mV	88%
CLG-100-20	20V, 0~4.80A	±3%	150mV	90%
CLG-100-24	24V, 0~4.00A	±3%	150mV	90%
CLG-100-27	27V, 0~3.55A	±3%	150mV	90%
CLG-100-36	36V, 0~2.65A	±2%	150mV	90%
CLG-100-48	48V, 0~2.00A	±2%	200mV	89%

150W — CLG-150

Model No.	Output	Tol.	R&N	Effi.
CLG-150-12A	12V, 0~11.0A	±2%	150mV	88%
CLG-150-15A	15V, 0~9.50A	±2%	150mV	88%
CLG-150-20A	20V, 0~7.50A	±2%	150mV	90%
CLG-150-24A	24V, 0~6.30A	±1%	150mV	90%
CLG-150-30A	30V, 0~5.00A	±1%	150mV	91%
CLG-150-36A	36V, 0~4.20A	±1%	150mV	91%
CLG-150-48A	48V, 0~3.20A	±1%	200mV	92%

☐= A (standard model) , B, C or blank (optional models)

Connector Size	Pin Configuration (Female)			Connector Size	Pin Configuration (Female)
M12				M15	
	2-pin	4-pin	5-pin		2-pin
	5A/PIN	5A/PIN	5A/PIN		12A / PIN
Order No.	M12-02	M12-04	M12-05	Order No.	M15-02
Suitable Current	5A max.	10A max.	10A max.	Suitable Current	12A max.

► Mean Well offer multiple kinds of waterproof connectors as the optional part for users to choose from. Minimum order quantity may vary for different models.

LED Series

96~240W High Efficiency with PFC

Features

- Universal AC input / Full range (up to 305VAC)
- Protections: Short circuit / Overload / Over voltage / Over temp.
- Built-in active PFC, PF>0.9 for 65% of load or higher
- IP67 / IP65 design for indoor or outdoor installations (except for C type)
- Output current adjustable through output cable or internal potential meter
- UL1310 class2 power unit (HLG-100□)
- Cooling by free air convection
- Suitable for LED lighting and street lighting applications
- Optional model:
  A-Type: IP65 rated. Output and constant current level can be adjusted through internal potential meter
  B-Type: IP67 rated and constant current level adjustable through output cable (optional)
  C-Type: Terminal block for I/O connection (optional)
  Blank-Type: IP67 rated, cable for I/O connection (optional)
- 3 years warranty

General Specification (Please refer to www.meanwell.com for detail spec.)

Model No.		HLG-100□	HLG-120□	HLG-150□	HLG-185□	HLG-240□ NEW
AC input voltage range		□= Blank or H type ; Blank: 90~264VAC, 127~370VDC ; H type: 90~305VAC, 127~431VDC				
AC inrush current (max.)		Cold start, 75A at 230VAC				
DC adjustment range		±10% rated output voltage				±6% rated output voltage
Current adjustment range		50%~100% rated output current adjustable by internal potential meter or through output cable				
Overload protection		95%~108% constant current limiting, auto-recovery				
Over voltage protection		110%~140% rated output voltage				
Setup, rise, hold up time		2500ms,50ms,12ms at full load and 230VAC				2000ms,50ms,12ms at full load and 230VAC
Withstand voltage		I/P-O/P: 3.75kVAC, I/P-FG: 1.88kVAC, O/P-FG: 0.5kVAC				
Working temperature		-30~+70°C (refer to output derating curve)				
Safety standards		UL60950-1, UL1012, TUV EN60950-1, EN61347-1, EN61347-2-13 approved (HLG-100~185 pending)				
EMC standards		EN55015, EN55022 class B, EN61000-3-2 class C, EN61000-4-2,3,4,5,6,8,11, ENV50204, EN61547				
Connection	Input	UL rated, 18AWGx3C (30cm); Terminal block for C type option				
	Output	A & Blank type: 14AWGx2C (30cm) ; B type: 14AWGx2C (30cm)+18AWGx2C (30cm); C type: Terminal block				
Dimension (LxWxH)(mm)		212.2x 68x 38.8		222.2x 68x 38.8		244.2x 68x 38.8 (C type: 251x 68x 38.8)

96W — Under Development — HLG-100

Model No.	Output	Tol.	R&N	Effi.
HLG-100□-12Ⓐ	12V, 0~5.0A	±2.5%	150mV	92.0%
HLG-100□-15Ⓐ	15V, 0~5.0A	±2.0%	150mV	92.0%
HLG-100□-20Ⓐ	20V, 0~4.8A	±1.0%	150mV	93.0%
HLG-100□-24Ⓐ	24V, 0~4.0A	±1.0%	150mV	93.0%
HLG-100□-30Ⓐ	30V, 0~3.2A	±1.0%	200mV	93.0%
HLG-100□-36Ⓐ	36V, 0~2.65A	±1.0%	200mV	93.0%
HLG-100□-42Ⓐ	42V, 0~2.28A	±1.0%	200mV	93.0%
HLG-100□-48Ⓐ	48V, 0~2.0A	±1.0%	200mV	93.5%
HLG-100□-54Ⓐ	54V, 0~1.77A	±1.0%	200mV	93.5%

120W — Under Development — HLG-120

Model No.	Output	Tol.	R&N	Effi.
HLG-120□-12Ⓐ	12V, 0~10A	±2.5%	150mV	92.0%
HLG-120□-15Ⓐ	15V, 0~8.0A	±2.0%	150mV	92.0%
HLG-120□-20Ⓐ	20V, 0~6.0A	±1.0%	150mV	93.0%
HLG-120□-24Ⓐ	24V, 0~5.0A	±1.0%	150mV	93.0%
HLG-120□-30Ⓐ	30V, 0~4.0A	±1.0%	200mV	93.0%
HLG-120□-36Ⓐ	36V, 0~3.4A	±1.0%	200mV	93.0%
HLG-120□-42Ⓐ	42V, 0~2.9A	±1.0%	200mV	93.0%
HLG-120□-48Ⓐ	48V, 0~2.5A	±1.0%	200mV	93.5%
HLG-120□-54Ⓐ	54V, 0~2.3A	±1.0%	200mV	93.5%

150W — Under Development — HLG-150

Model No.	Output	Tol.	R&N	Effi.
HLG-150□-12Ⓐ	12V, 0~12.5A	±2.5%	150mV	92.0%
HLG-150□-15Ⓐ	15V, 0~10.0A	±2.0%	150mV	92.0%
HLG-150□-20Ⓐ	20V, 0~7.50A	±1.0%	150mV	93.0%
HLG-150□-24Ⓐ	24V, 0~6.25A	±1.0%	150mV	93.0%
HLG-150□-30Ⓐ	30V, 0~5.00A	±1.0%	200mV	93.0%
HLG-150□-36Ⓐ	36V, 0~4.20A	±1.0%	200mV	93.0%
HLG-150□-42Ⓐ	42V, 0~3.60A	±1.0%	200mV	93.0%
HLG-150□-48Ⓐ	48V, 0~3.20A	±1.0%	200mV	93.5%
HLG-150□-54Ⓐ	54V, 0~2.80A	±1.0%	200mV	93.5%

185W — Under Development — HLG-185

Model No.	Output	Tol.	R&N	Effi.
HLG-185□-12Ⓐ	12V, 0~13.0A	±2.5%	150mV	92.0%
HLG-185□-15Ⓐ	15V, 0~11.5A	±2.0%	150mV	92.0%
HLG-185□-20Ⓐ	20V, 0~9.30A	±1.0%	150mV	93.0%
HLG-185□-24Ⓐ	24V, 0~7.80A	±1.0%	150mV	93.0%
HLG-185□-30Ⓐ	30V, 0~6.20A	±1.0%	200mV	93.0%
HLG-185□-36Ⓐ	36V, 0~5.20A	±1.0%	200mV	93.0%
HLG-185□-42Ⓐ	42V, 0~4.40A	±1.0%	200mV	93.0%
HLG-185□-48Ⓐ	48V, 0~3.90A	±1.0%	200mV	93.5%
HLG-185□-54Ⓐ	54V, 0~3.45A	±1.0%	200mV	93.5%

240W — NEW — HLG-240

Model No.	Output	Tol.	R&N	Effi.
HLG-240□-12Ⓐ	12V, 0~16.0A	±2.5%	150mV	90%
HLG-240□-15Ⓐ	15V, 0~15.0A	±2.0%	150mV	90%
HLG-240□-20Ⓐ	20V, 0~12.0A	±1.0%	150mV	92%
HLG-240□-24Ⓐ	24V, 0~10.0A	±1.0%	150mV	93%
HLG-240□-30Ⓐ	30V, 0~8.00A	±1.0%	200mV	93%
HLG-240□-36Ⓐ	36V, 0~6.70A	±1.0%	200mV	94%
HLG-240□-42Ⓐ	42V, 0~5.72A	±1.0%	200mV	94%
HLG-240□-48Ⓐ	48V, 0~5.00A	±1.0%	200mV	94%
HLG-240□-54Ⓐ	54V, 0~4.45A	±1.0%	350mV	94%

□ = Blank or H type
◯ = A (standard model), B, C or Blank (optional models)

LED Series

20~60W Single Output with PFC

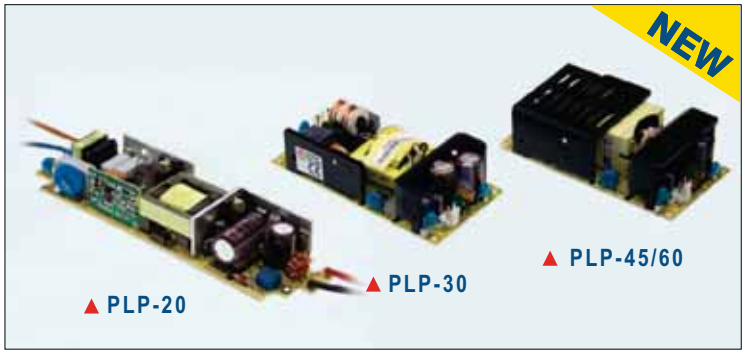

Features

- Universal AC input / Full range
- Protections: Short circuit / Overload / Over voltage / Over temperature (PLP-20 only)
- Built-in active PFC function, PF>0.9 for 75% of load or higher
- Cooling by free air convection
- Built-in constant current limiting circuit (C.C.+C.V. mode)
- 100% full load burn-in test
- Suitable for building in LED lighting systems
- 2 years warranty

General Specification (Please refer to www.meanwell.com for detail spec.)

Model No.		PLP-20	PLP-30	PLP-45	PLP-60
AC input voltage range		90~277VAC; 127~392VDC	90~264VAC		
AC inrush current (max.)		Cold start, 40A at 230VAC		Cold start, 42A at 230VAC	
Current adjustment range		75%~100% rated output current			
Overload Protection	Range	95~110%	100 ~ 110%		
	Type	Constant current limiting, auto-recovery			
Over voltage protection		115~135% shut off, re-power on to recover			
Setup, rise, hold up time		2300ms, 150ms at full load and 230VAC, no hold up time	1000ms(setup time) at full load and 230VAC, no hold up time		
Withstand voltage		I/P-O/P: 3.75kVAC	I/P-O/P: 3.75kVAC, I/P-FG: 1.88kVAC, O/P-FG: 0.5kVAC		
Working temperature		-30~+60°C (refer to output derating curve)	-30~+70°C (refer to output derating curve)		
Safety standards		TUV EN61347-1, EN61347-2-13 approved			
EMC standards		EN55015, EN61000-3-2 Class C, EN61000-3-3, EN61000-4-2,3,4,5,6,8,11, EN61547			
Connection		UL rated, 18AWGx2C (30cm)	3+2P / 3.96mm pitch, JST P/N: B3P / B2P-VH		
Dimension (LxWxH)(mm)		140x 32x 22	101.6x 50.8x 23	101.6x 50.8x 28	

PLP-20 Series

Model No.	Output	Tol.	R&N	Effi.
PLP-20-12	12V, 0~1.6A	±10%	2.5V	80%
PLP-20-18	18V, 0~1.1A	±10%	3.0V	81%
PLP-20-24	24V, 0~0.8A	±10%	3.0V	82%
PLP-20-36	36V, 0~0.55A	±10%	3.0V	83%
PLP-20-48	48V, 0~0.42A	±10%	3.8V	84%

PLP-30 Series

Model No.	Output	Tol.	R&N	Effi.
PLP-30-12	12V, 0~2.5A	±10%	2.0V	83.0%
PLP-30-24	24V, 0~1.3A	±10%	2.4V	85.5%
PLP-30-48	48V, 0~0.63A	±10%	4.8V	86.5%

PLP-45 Series

Model No.	Output	Tol.	R&N	Effi.
PLP-45-12	12V, 0~3.8A	±10%	2.4V	84%
PLP-45-24	24V, 0~1.9A	±10%	2.4V	88%
PLP-45-48	48V, 0~0.95A	±10%	4.8V	89%

PLP-60 Series

Model No.	Output	Tol.	R&N	Effi.
PLP-60-12	12V, 0~5.0A	±10%	4.5V	84%
PLP-60-24	24V, 0~2.5A	±10%	4.5V	88%
PLP-60-48	48V, 0~1.3A	±10%	4.8V	89%

Comparison Chart

Model Name	Case		Potted	PFC	V / I Adj.	IP	Hold-up Time	Ripple & Noise	Optional Dimming	Application
	Metal	Plastic								
HLG-100 / 120 / 150 / 185 / 240	●		●	●	●	65/67	Normal	Normal	●	General
CLG-150 (Non class 2)	●		●	●	●	65/67	Normal	Normal		General
CLG-100	●		●	●		67	Normal	Normal		General
CLG-60	●		●	●		67	Non	High		LED
CEN-60 / 75 / 100	●			●	●	66	Non	High		LED
PLN-100		●		●	●	64	Normal	Normal		General
PLN-30 / 45 / 60		●		●	●	64	Non	High		LED
PLN-20		●		●	I only	64	Non	High		LED
PLC-100		●		●	●	Non	Normal	Normal		General
PLC-30 / 60		●		●	●	Non	Non	High		LED
ELN-30 / 60		●			●	64	Normal	Normal	●	General
LPH / LPL-18 LPHC / LPLC-18 LPV /LPC-20 / 35 / 60		●	●			67	Normal	Normal		General
PLP-20 / 30 / 45 / 60	PCB type			●	I only	Non	Non	High		LED
ULP-150	●(U type)		●(50%)	●	V only	Non	Normal	Normal		General

19" Rack Power

1000~8000W Single Output

1000W 1U Rack Power System

- Universal AC input / Full range
- Built-in 5V/0.3A standby power
- Built-in active PFC function, PF>0.96
- Protections: Short circuit / Overload
  Over voltage / Over temp.
- Forced air cooling by built-in DC fan
- High power density 10.7W/in^3
- 1U low profile
- Output voltage can be trimmed between 90 ~ 110% of the rated output voltage
- Active current sharing up to 3000W (3 units) in one 19" rack, 3 racks max. can be operated in parallel(up to 8 units)
- Remote control for single unit
- Built-in remote sense function
- Hot-swap operation
- Internal oring diode
- AC OK and DC OK signal output
- Optional I^{2}C serial data bus
- 3 years warranty

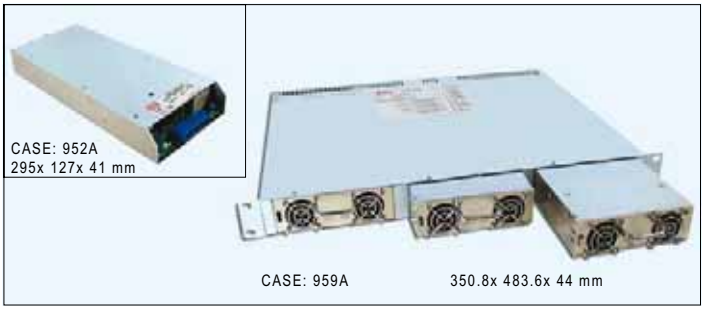

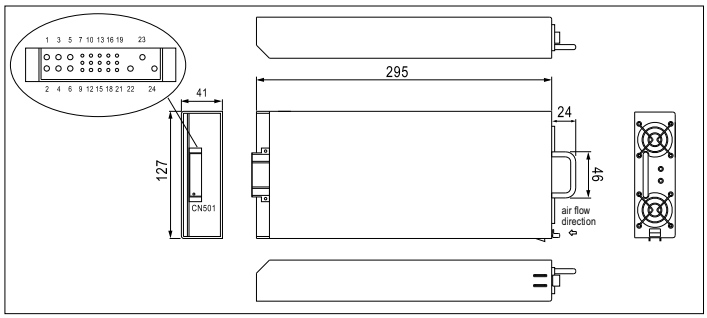

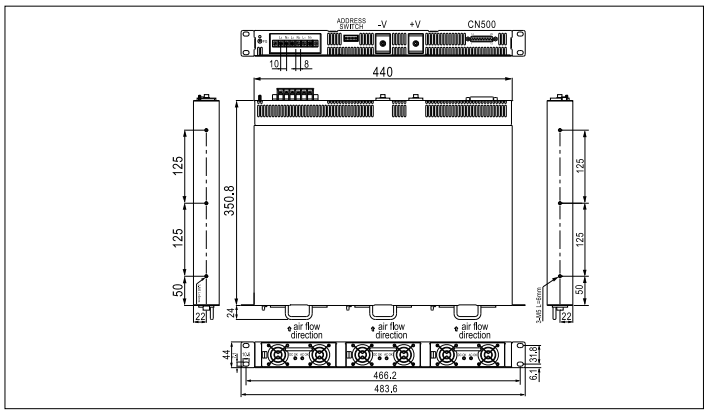

AC input voltage range ..... 90~264VAC
DC adjustment range ..... ±3% rated output voltage
Overload protection ..... 105%~125% constant current limiting, auto-recovery
Over voltage protection ..... 110%~135% rated output voltage
Setup, rise, hold up time ..... 1000ms, 60ms, 16ms at full load and 230VAC
Withstand voltage ..... I/P-O/P:3kVAC, I/P-FG:1.5kVAC, 1 minute
Working temperature ..... -20~50°C@100%, 60°C@60%
Safety standards ..... UL60950-1, TUV EN60950-1 approved
EMC standards ..... EN55022 Class B, EN61204-3, EN61000-3-2,-3, EN61000-4-2,3,4,5,6,8,11, ENV50204, EN61000-6-2 heavy industry level
Packing ..... 1.91kg (single unit) ; 11kg (rack with 3 units)

Model No.	Output	Tol.	R&N	Effi.
RCP-1000-12	12V, 0~60A	±1%	150mV	81%
RCP-1000-24	24V, 0~40A	±1%	200mV	87%
RCP-1000-48	48V, 0~21A	±1%	300mV	89%
RCP-1U☐	19" 1U rack for RCP-1000 series ☐"= I: AC inlet ; T: terminal block			

Power Control and Monitor Unit

- 1U low profile
- 19-inch rack mounting
- I^{2}C decoder, control and monitor up to 3 RCP-1000-☐-C units
- Suitable for all kinds of RCP output (12V,24V,48V)
- Digital meters for output voltage, output current, and internal temperature on front panel
- Potential meter for adjusting output voltage of RCP-1000 unit on front panel
- Relay contacts and LED indicators for AC fail, DC fail, and over temperature warning
- Removable fixing accessory
- 3 years warranty

Front

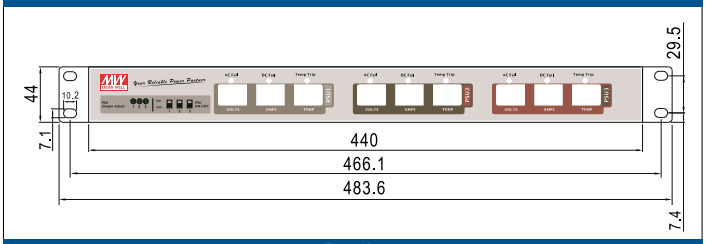

Back

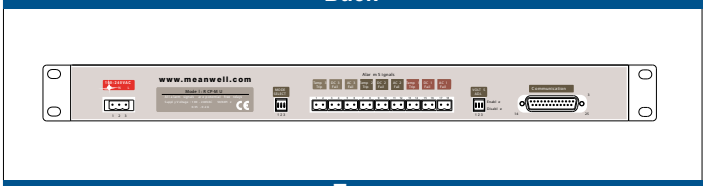

Top

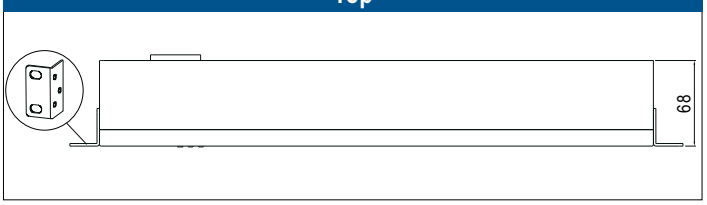

AC input voltage range ..... 90~264VAC
AC inrush current ..... Cold start, 30A at 115VAC, 50A at 230VAC
Relay contact rating 30VDC, 1A
Working temperature ..... -20~60°C
Safety standards ..... Design refer to UL60950-1, TUV EN60950-1
Withstand voltage I/P-O/P:3kVAC, I/P-FG:1.5kVAC, O/P-FG:0.5kVAC
Isolation resistance ..... I/P-O/P, I/P-FG, O/P-FG: 100M Ohms/500VDC
EMC standards ..... Compliance to EN55022, EN61000-3-2,-3, EN61000-4-2,3,4,5,6,8,11
Contection ..... Screw DIN terminal for AC input and relay contact output; D-Type right angle 25 positions for communication port

Model No.	Application
RCP-MU	Control and monitor RCP series

We are a TQM (Total Quality Management) company and ISO-9001 certified since 1994.

19" Rack Power

Custom-Made 19" 2U Rack Power System

- Standard 19" 2U rack – 480 x 420 x 80mm
- Custom rack configurations available, 4500W max., up to 8 outputs
- LED indicators on front panel
- Meters for output voltage and current on front panel
- Front panel voltage adjustment
- Wide range of backplane connection option
- Choose from MEAN WELL's wide range of standard power supply
- Complete assembly and testing on your custom rack system
- Engineering support available to assist you in specifying your requirement
- 2 years warranty

Panel Type A: with power switch, LED indicators, and output adjustment potentiometers.

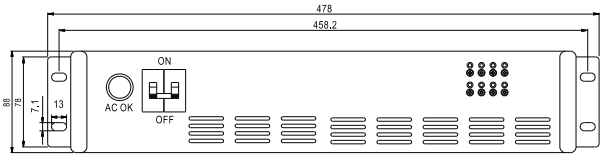

Panel Type B: with additional digital meters and selector switch.

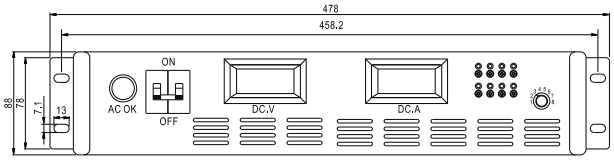

Example

12V, 4500W 2U Rack System

- RSP-1500-12 x 3pcs
- LED indicators and front panel voltage adjustment
- Output voltage and current digital meters
- I/O interface:
  - AC Input — Terminal block
  - DC Output — Copper pillars
  - Single Output — Terminal block

We provide specification, drawing, test report and more information, please visit our website —
http://www.meanwell.com

Customer Satisfaction —
Today's effort, tomorrow's reward. Continuously improve CQTS to satisfy customer is our goal.

ARCP Series 19" Rack Charger System

- Operate as a power supply & smart charger
- Universal AC input / Full range
- Built-in active PFC function, PF>0.96
- Protection: Short circuit / Overload / Over voltage / Over temperature
- Designed as N+1 redundancy power system
- Built-in active current sharing
- High efficiency up to 89%
- Output voltage trimming function
- Digital display indications of output voltage, current, and battery temperature
- Remote ON/OFF Control
- Four alarm functions:
  AC fail, power module fault, over temperature, battery low
- Maximum protection for long battery life:
  Battery low disconnect circuit
  Battery current limiting function
  Battery reverse polarity protection
- Case: Power Supply - up to three 19"/1 U racks
  DC Distributor - 19"/2U rack

▶ Power Supply

Output Power (KW)	Output Voltage (VDC)	Output Current (A)	No. of RCP-1U Rack	Power Supply Module Type	Module Output Power (W)	No. of Modules
1.5	12	120	1	RCP-1000-12	720	2
2.2		180	1			3
1.9	24	80	1	RCP-1000-24	960	2
2.9		120	1			3
4.8		200	2			5
2	48	42	1	RCP-1000-48	1000	2
3		63	1			3
6		125	2			6
9		190	3			9

▶ Power Supply - Charger

Output Power (KW)	Output Voltage (VDC)	Output Current (A)	No. of RCP-1U Rack	Power Supply Module Type	Module Output Power (W)	No. of Modules
1.5	13.6	100	1	RCP-1000-13.5	720	2
2.2		160	1			3
2.9		200	2			4
1.9	27.2	70	1	RCP-1000-27	960	2
2.8		100	1			3
5.5		200	2			6
2	54.4	37	1	RCP-1000-54	1000	2
3		55	1			3
6		110	2			6
9		165	3			9

Modular Series

450W/650W/1000W Modular Power

MP450 (450W, 5 SLOT) MP650 (650W, 5 SLOT) MP1K0 (1000W, 7 SLOT)

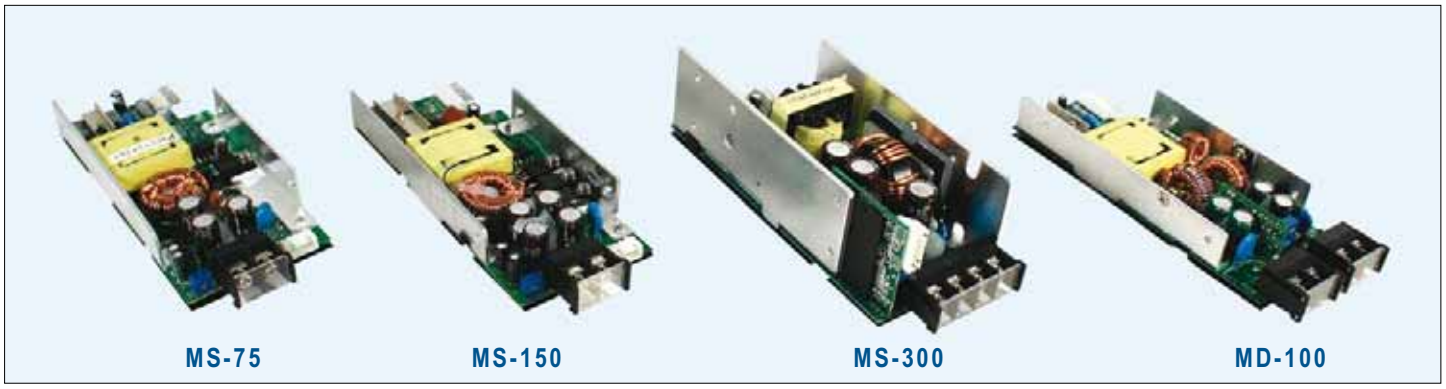

MS-75 MS-150 MS-300 MD-100

Description

Modular series are switching power supplies with modular design that consist of two stages: front-end PFC and output modules. Using ZVS (Zero Voltage Switching) technology to realize the power factor correction, the line input is rectified into high DC voltage (around 390Vdc) by the front-end PFC stage, and then the DC output modules will transfer the operating voltage into all kinds of DC output voltages from 1.6V~53V. Right now we offer 75W, 150W, 300W single output modules and 100W dual output modules to fulfill all kinds of applications up to 14 isolated outputs.
There are millions of combinations available for the Modular series. Users can configure the DC outputs they need and get the fastest solution for their own power requirement with safety and EMC certificates. No more NRE / safety application charges and long period of waiting for certificates! Providing standard products as usual, MEAN WELL offer you a revolutionary standard power solution that fulfills your custom-made request!

Output Configuration Guide

MP □-□ □ □ □ □ □ □ □-□

SLOT 1 SLOT 2 SLOT 3 SLOT 4 SLOT 5 SLOT 6 SLOT 7

Parallel or option code

For MP1K0 only

Max. output wattage (450 / 650 / 1K0)

Modular Power with PFC

Example:

MP650-A 2 E H U

SLOT5-O/P:24V@2.5A, 5V@8A

SLOT4-O/P:24V@6.5A

SLOT2,3-O/P:12V@25A

SLOT-O/P:2V@25A

Features

- Millions of output configuration is available
- Using ZVS technology to reduce power dissipation and improve efficiency
- Universal AC input / Full range
- Built-in active PFC compliance to EN61000-3-2
- Built-in constant current limiting circuit for single output modules
- Remote control on each output module
- Remote sense on each output module (MS-75/150/300)
- Short circuit / Overload / Over voltage protections for all modules
- Built-in parallel function for MS-300(up to 3 units)
- Cooling by built-in DC fan with fan alarm function
- Additional 12V/0.1A auxiliary output for remote control
- 3 years warranty

Modular Series

General Specification (Please refer to www.meanwell.com for detail spec.)

Model No.	MP450	MP650	MP1K0
AC input voltage range	85~264VAC or 120~370VDC		
Power Factor	PF >0.95 / 230VAC, PF > 0.98 / 115VAC at full load		
AC inrush current (max.)	Cold start, 40A at 230VAC	Cold start, 50A at 230VAC	Cold start, 40A at 230VAC
Max output voltage	450W	650W	1000W
Efficiency (typical)	83%	85%	84%
Over temperature protection	Output shutdown, auto-recovery		
Fan alarm	Output shutdown when fan malfunction		
Withstand voltage	I/P - O/P: 3kVAC, I/P - FG: 1.5kVAC, O/P - FG: 0.5kVAC, 1 minute		
Working temperature	-20~+50°C@100%, +70°C @ 50% load		
Safety standards	UL60950-1, TUV EN60950-1		
EMC standards	Compliance to EN55022 class B, EN61000-3-2,3, EN61000-4-2,3,4,5,6,8,11, ENV50204, EN55024 light industry level, criteria A		
Connection	Input side: 3P/10mm pitch terminal block & JST B3B-XH		
Dimension (LxWxH)(mm)	254x 127x 63.5	278x 127x 63.5	278x 177.8x 63.5

MS-75: 1-SLOT single output (75W max.)

Item Code	Output	★Peak I	Vdc adj.	Tol.	R&N.
L	3.3V, 0~15A	17.3A	2.6~4.0V	±2%	80mV
M	5V, 0~15A	17.3A	4.0~6.0V	±2%	80mV
N	12V, 0~6.3A	7.30A	9.0~13.2V	±1%	150mV
O	15V, 0~5.0A	5.80A	13.2~16.8V	±1%	150mV
P	24V, 0~3.2A	3.70A	20.0~26.4V	±1%	150mV
Q	48V, 0~1.6A	1.80A	40.0~53.0V	±1%	250mV

MS-150: 1-SLOT single output (150W max.)

Item Code	Output	★Peak I	Vdc adj.	Tol.	R&N.
A	2V, 0~25A	30.0A	1.6~2.6V	±3%	50mV
B	3.3V, 0~25A	30.0A	2.6~4.0V	±2%	80mV
C	5V, 0~25A	30.0A	4.0~6.0V	±2%	80mV
D	7.5V, 0~18A	20.7A	6.0~9.0V	±2%	100mV
E	12V, 0~13A	15.0A	9.0~13.2V	±1%	150mV
F	15V, 0~10A	11.5A	13.2~16.8V	±1%	150mV
G	18V, 0~8.5A	9.80A	16.8~20.0V	±1%	150mV
H	24V, 0~6.5A	7.50A	20.0~26.4V	±1%	150mV
I	27V, 0~5.8A	6.70A	25.0~31.0V	±1%	150mV
J	33V, 0~4.7A	5.40A	30.0~40.0V	±1%	250mV
K	48V, 0~3.2A	3.68A	40.0~53.0V	±1%	250mV

MS-300: 2-SLOT parallelable single output (300W max.)

Item Code	Output	★Peak I	Vdc adj.	Tol.	R&N.
2A	2V, 0~50A	57.5A	1.6~2.6V	±3%	80mV
2B	3.3V, 0~50A	57.5A	2.6~4.0V	±2%	80mV
2C	5V, 0~50A	57.5A	4.0~6.0V	±2%	80mV
2D	7.5V, 0~40A	46.0A	6.0~9.0V	±2%	100mV
2E	12V, 0~25A	29.0A	9.0~13.2V	±1%	150mV
2F	15V, 0~20A	23.0A	13.2~16.8V	±1%	150mV
2G	18V, 0~16.7A	19.2A	16.8~20.0V	±1%	150mV
2H	24V, 0~12.5A	14.4A	20.0~26.4V	±1%	150mV
2I	27V, 0~11.2A	12.9A	25.0~31.0V	±1%	200mV
2J	33V, 0~9.1A	10.5A	30.0~40.0V	±1%	250mV
2K	48V, 0~6.3A	7.2A	40.0~53.0V	±1%	300mV

MD-100: 1-SLOT isolated dual output (100W max.)

Item Code	Output	Vdc adj.	Tol.	R&N.	Max.
R	5V, 2.0~10A	4.75~5.5V	±3%	100mV	90.0W
	5V, 0.0~8.0A	4.75~5.5V	±3%	100mV	
S	5V, 2.0~10A	4.75~5.5V	±3%	100mV	100.4W
	12V, 0.0~5.8A	11.4~13.2V	±3%	150mV	
T	5V, 2.0~10A	4.75~5.5V	±3%	100mV	101.0W
	15V, 0.0~4.7A	14.2~16.5V	±3%	150mV	
U	24V, 0.5~3.0A	22.8~26.4V	±3%	200mV	100.0W
	5V, 0.0~10A	4.75~5.5V	±3%	100mV	
V	24V, 0.6~3.0A	22.8~26.4V	±2%	240mV	100.8W
	12V, 0.0~4.7A	11.4~13.2V	±3%	120mV	
W	12V, 1.0~5.0A	11.4~13.2V	±2%	120mV	100.8W
	12V, 0.0~5.8A	11.4~13.2V	±3%	120mV	
X	15V, 1.0~4.7A	14.2~16.5V	±2%	150mV	100.5W
	15V, 0.0~4.7A	14.2~16.5V	±3%	150mV	

Parallel Connection Accessory

FAP-001 (For MS-300)	

Series Connection Accessory

FAS-001 (For 1-slot modules)	
FAS-002 (For 2-slot modules)	

★Peak I: 35% duty cycle maximum within every 10 seconds. Average output power should not exceed the rated power.

★Please use MP450-CNPOQ, MP650-A2EHU, MP1K0-2C2CEKL-1.....etc. as the order code. For more detail information about technical issues, please refer to the user manual.

★Please refer to the user manual for more detail information about parallel connection and the parallel codes. About series connection, please contact us or your local MEAN WELL distributor for more details.

Open Frame

5~20W AC/DC Module Type

▲ 5W: 62.85x 50x 19.7 mm

▲ 10W: 70x 50x 22.7 mm

▲ 15W: 75x 53x 22.7 mm

▲ 20W: 94x 56x 22.7 mm

Features

- Universal AC input / Full range
- Ultra-miniature size
- Protections: Short circuit / Overload / Over voltage
- No load power consumption <0.5W (<0.75W for 20W models)
- Fully isolated plastic case
- Isolation class II (5~15W)
- Low leakage current < 200uA (20W)
- Cooling by free air convection
- Medical safety approved
- Meet industrial, IT safety requirements
- 100% full load burn-in test
- 3 years warranty

PM-05 / 10 / 15 Series

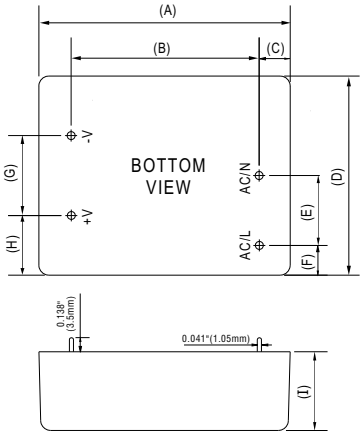

	5W		10W		15W	
A	2.475"	(62.85mm)	2.76"	(70mm)	2.95"	(75mm)
B	1.85"	(47mm)	2.13"	(54mm)	2.441"	(62mm)
C	0.306"	(7.8mm)	0.315"	(8mm)	0.256"	(6.5mm)
D	1.97"	(50mm)	1.97"	(50mm)	2.09"	(53mm)
E	0.689"	(17.5mm)	0.689"	(17.5mm)	0.788"	(20mm)
F	0.295"	(7.5mm)	0.295"	(7.5mm)	0.256"	(6.5mm)
G	0.789"	(20.04mm)	0.789"	(20.04mm)	0.906"	(23.01mm)
H	0.59"	(15mm)	0.59"	(15mm)	0.59"	(15mm)
I	0.776"	(19.7mm)	0.89"	(22.7mm)	0.89"	(22.7mm)

PM-20 Series

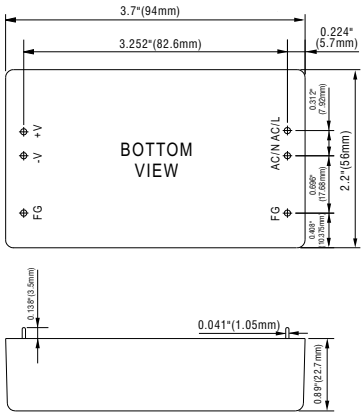

General Specification

AC input voltage range ..... 85~264VAC; 120~370VDC
Frequency range 47-440Hz
AC inrush current (max.) ... Cold start, 25A at 115VAC, 45A at 230VAC
(PM-15 : 30A at 115VAC, 50A at 230VAC)
(PM-20: 30A at 115VAC, 65A at 230VAC)
Overload protection ..... >105% hiccup mode, auto recovery
Over voltage protection ..... 115%~135% rated output voltage, shut off, AC recycle to re-start
Setup, rise, hold up time ... 1000ms, 20ms, 100ms @ 230VAC
(PM-20: 500ms, 20ms, 50ms @ 230VAC)
Withstand voltage ..... I/P-O/P: 4.0kVAC, 1 minute
Working temperature ..... -20°C~70°C (refer to output derating curve)
Safety standards ..... UL60601-1, TUV EN60601-1, UL60950-1 (PM-15) approved
EMC standards ..... EN55011, EN55022 Class B, EN61000-3-2,3
EN61000-4-2,3,4,5,6,8,11, ENV50204, EN55024,
EN60601-1-2, EN61204-3 Medical level, criteria A
Connection ..... 4 industrial pins (20W: 6 industrial pins)
Packing ..... 0.085kg ; 120pcs / 11.2kg / 0.97CUFT(PM-05)
0.105kg ; 120pcs / 13.6kg / 0.97CUFT(PM-10)
0.14kg ; 120pcs / 17.8kg / 0.97CUFT(PM-15)
0.18kg ; 90pcs / 17.2kg / 0.97CUFT(PM-20)

Energy Saving —
We care about energy saving. This logo represents that this model has "low no load power consumption"!

To Satisfy our customers is our goal —
- High Quality
- Low Cost
- Prompt Delivery
- Best Service

PM-05 Series

Model No.	Output	Tol.	R&N	Effi.
PM-05-3.3	3.3V, 0~1.25A	±3%	80mV	67%
PM-05-5	5V, 0~1.00A	±2%	80mV	71%
PM-05-12	12V, 0~0.42A	±2%	150mV	73%
PM-05-15	15V, 0~0.33A	±2%	150mV	74%
PM-05-24	24V, 0~0.23A	±2%	240mV	76%

PM-10 Series

Model No.	Output	Tol.	R&N	Effi.
PM-10-3.3	3.3V, 0~2.50A	±3%	80mV	66%
PM-10-5	5V, 0~2.00A	±2%	80mV	74%
PM-10-12	12V, 0~0.85A	±2%	150mV	78%
PM-10-15	15V, 0~0.67A	±2%	150mV	79%
PM-10-24	24V, 0~0.42A	±2%	240mV	79%

PM-15 Series

Model No.	Output	Tol.	R&N	Effi.
PM-15-3.3	3.3V, 0~3.50A	±3%	80mV	73%
PM-15-5	5V, 0~3.00A	±2%	80mV	76%
PM-15-12	12V, 0~1.25A	±2%	150mV	78%
PM-15-15	15V, 0~1.00A	±2%	150mV	79%
PM-15-24	24V, 0~0.63A	±2%	240mV	81%

PM-20 Series

Model No.	Output	Tol.	R&N	Effi.
PM-20-3.3	3.3V, 0~4.50A	±3%	80mV	71%
PM-20-5	5V, 0~4.40A	±2%	80mV	75%
PM-20-12	12V, 0~1.80A	±2%	150mV	81%
PM-20-15	15V, 0~1.40A	±2%	150mV	83%
PM-20-24	24V, 0~0.92A	±2%	240mV	84%

Open Frame

5~20W AC/DC On Board Type

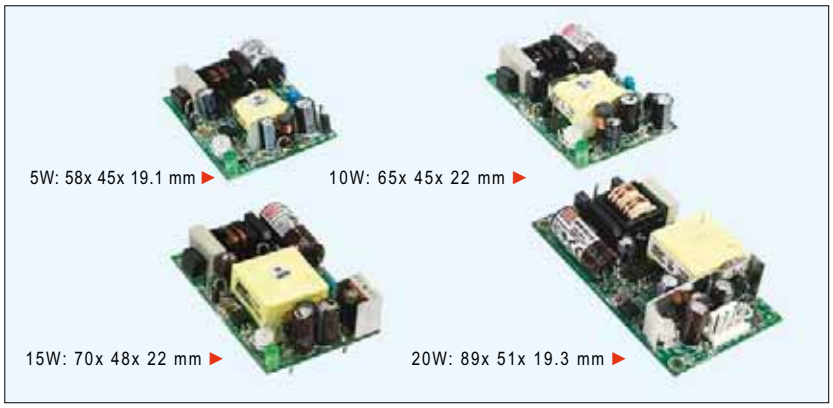

Features

- Universal AC input / Full range
- Ultra-miniature size, light weight
- Protections:
  Short circuit / Overload / Over voltage / Over temp.
- No load power consumption <0.5W (<0.75W for 20W models)
- Isolation class II (5~15W)
- On-board type version available for 20W (optional)
- Low leakage current < 200uA (20W)
- Cooling by free air convection
- Medical safety approved
- Meet industrial, IT safety requirements
- 100% full load burn-in test
- 3 years warranty

NFM-05 / 10 / 15 Series

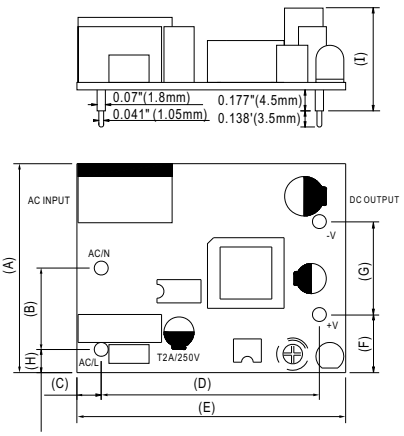

	5W		10W		15W	
A	1.77"	(45mm)	1.77"	(45mm)	1.89"	(48mm)
B	0.689"	(17.5mm)	0.689"	(17.5mm)	0.788"	(20mm)
C	0.21"	(5.33mm)	0.22"	(5.5mm)	0.157"	(4mm)
D	1.85"	(47mm)	2.13"	(54mm)	2.441"	(62mm)
E	2.28"	(57.9mm)	2.56"	(65mm)	2.75"	(69.85mm)
F	0.491"	(12.47mm)	0.491"	(12.47mm)	0.492"	(12.5mm)
G	0.789"	(20.04mm)	0.789"	(20.04mm)	0.906"	(23.01mm)
H	0.196"	(5mm)	0.196"	(5mm)	0.157"	(4mm)
I	0.75"	(19.1mm)	0.87"	(22mm)	0.87"	(22mm)

NFM-20 Series

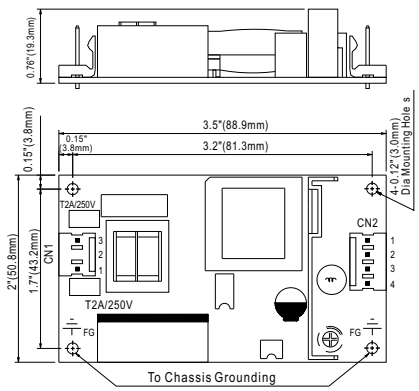

General Specification

AC input voltage range ..... 85~264VAC; 120~370VDC
Frequency range 47-440Hz
AC inrush current (max.) ..... Cold start, 25A at 115VAC, 45A at 230VAC
(NFM-15: 30A at 115VAC, 50A at 230VAC)
(NFM-20: 30A at 115VAC, 65A at 230VAC)
DC adjustment range ..... ±10% rated output voltage
Overload protection ..... >105% hiccup mode, auto recovery
Over voltage protection ..... 115%~135% rated output voltage, shut off, AC recycle to re-start
Over temp. protection ..... U1,Tj: 140~160°C, power shutdown, recovers automatically after temperature goes down
Setup, rise, hold up time ..... 1000ms, 20ms, 100ms @ 230VAC
(NFM-20: 500ms, 20ms, 50ms @ 230VAC)
Withstand voltage ..... I/P-O/P: 4.0KVAC, 1 minute
Working temperature ..... -20°C~70°C (refer to output derating curve)
Safety standards ..... UL60601-1, TUV EN60601-1, UL60950-1 (NFM-15) approved
EMC standards ..... EN55011, EN55022 Class B, EN61000-3-2,3 EN61000-4-2,3,4,5,6,8,11, ENV50204, EN55024, EN60601-1-2, EN61204-3 Medical level, criteria A
Connection ..... 4 industrial pins for 5~15W
3P / 4P / 3.96mm pitch, Molex 41791-03/04 for 20W
Packing ..... 0.03kg ; 120pcs / 4.6kg / 0.97CUFT(NFM-05)
0.045kg ; 120pcs / 6.4kg / 0.97CUFT(NFM-10)
0.065kg ; 120pcs / 8.8kg / 0.97CUFT(NFM-15)
0.09kg ; 105pcs / 10.5kg / 0.97CUFT(NFM-20)

Energy Saving —
We care about energy saving. This logo represents that this model has "low no load power consumption"!

NFM-05 Series

Model No.	Output	Tol.	R&N	Effi.
NFM-05-3.3	3.3V, 0~1.25A	±2%	80mV	67%
NFM-05-5	5V, 0~1.00A	±2%	80mV	71%
NFM-05-12	12V, 0~0.42A	±1%	150mV	73%
NFM-05-15	15V, 0~0.33A	±1%	150mV	74%
NFM-05-24	24V, 0~0.23A	±1%	240mV	76%

NFM-10 Series

Model No.	Output	Tol.	R&N	Effi.
NFM-10-3.3	3.3V, 0~2.50A	±2%	80mV	66%
NFM-10-5	5V, 0~2.00A	±2%	80mV	74%
NFM-10-12	12V, 0~0.85A	±1%	150mV	78%
NFM-10-15	15V, 0~0.67A	±1%	150mV	79%
NFM-10-24	24V, 0~0.42A	±1%	240mV	79%

NFM-15 Series

Model No.	Output	Tol.	R&N	Effi.
NFM-15-3.3	3.3V, 0~3.50A	±2%	80mV	73%
NFM-15-5	5V, 0~3.00A	±2%	80mV	76%
NFM-15-12	12V, 0~1.25A	±1%	150mV	78%
NFM-15-15	15V, 0~1.00A	±1%	150mV	79%
NFM-15-24	24V, 0~0.63A	±1%	240mV	81%

NFM-20 Series

Model No.	Output	Tol.	R&N	Effi.
NFM-20-3.3	3.3V, 0~4.50A	±2%	80mV	71%
NFM-20-5	5V, 0~4.40A	±2%	80mV	75%
NFM-20-12	12V, 0~1.80A	±1%	150mV	81%
NFM-20-15	15V, 0~1.40A	±1%	150mV	83%
NFM-20-24	24V, 0~0.92A	±1%	240mV	84%

Open Frame

30~45W 1~3 Output Medical Type

30W Single Output Medical Type

- Universal AC input / Full range
- Medical safety approved
- Protections: Short circuit / Overload / Over voltage / Over temp.
- Low leakage current≤0.3mA
- Compact size, low profile
- 100% full load burn-in test
- 3 years warranty

101.6x 65.8x 23.5 mm

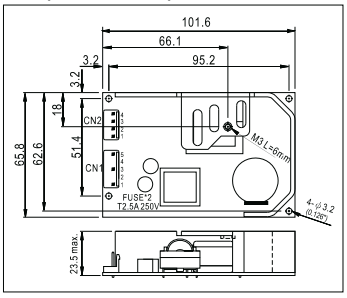

AC input voltage range .... 88~264VAC; 120~370VDC
Overload protection ..... >105% hiccup mode, auto-recovery
Over voltage protection ... 110%~135% rated output voltage
Leakage current ..... Less than 0.3mA at 264VAC
Withstand voltage ..... I/P-O/P: 4kVAC, I/P-FG:1.5kVAC, 1minute
Working temperature ..... 0~40°C@100%, -10°C@80%, 60°C@60% load
Safety standards ..... UL2601-1, TUV EN60601-1, IEC60601-1 approved
EMC standards ..... EN55011 class B, EN60601-1-2, EN61000-3-2,3, EN61000-4-2,3,4,5,6,8,11, ENV50204
Connection ..... 5+4P/ 3.96mm pitch, Molex P/N: 41791-05,04
Packing ..... 0.16kg ; 90pcs / 15.8kg / 1.02CUFT

Model No.	Output	Tol.	R&N	Effi.
MPS-30-5	5V, 0~5.0A	±3%	80mV	72%
MPS-30-12	12V, 0~2.5A	±3%	120mV	75%
MPS-30-15	15V, 0~2.0A	±3%	150mV	76%
MPS-30-24	24V, 0~1.2A	±3%	240mV	77%
MPS-30-27	27V, 0~1.1A	±3%	240mV	78%
MPS-30-48	48V, 0~0.6A	±2%	240mV	78%

45W 1~3 Output Medical Type

- Universal AC input / Full range
- Medical safety approved
- Protections: Short circuit / Overload / Over voltage
- Low leakage current≤0.3mA
- Approvals: UL / CUL / TUV / CB / CE
- Fixed switching frequency at 45kHz
- 100% full load burn-in test
- 3 years warranty

127x 76x 28 mm

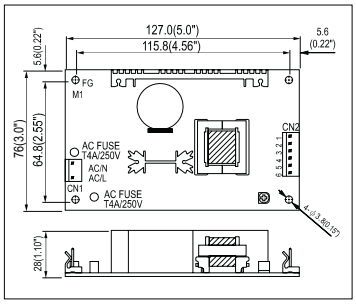

AC input voltage range .... 90~264VAC; 120~370VDC
AC inrush current ..... Cold start, 20A at 115VAC, 40A at 230VAC
DC adjustment range ..... CH1: ±10% rated output voltage
Overload protection ..... 53~75W hiccup mode, auto-recovery
Over voltage protection .... CH1: 115%~135% rated output voltage
Leakage current ..... Less than 0.3mA at 264VAC
Setup, rise, hold up time .. 800ms, 30ms, 50ms at full load and 230VAC
Withstand voltage ..... I/P - O/P: 4kVAC, I/P - FG: 1.5kVAC, 1 minute
Working temperature ..... -10°C~60°C (refer to output derating curve)
Safety standards ..... UL2601-1, TUV EN60601-1, IEC60601-1 approved
EMC standards ..... EN55011 class B, EN61000-4-2,3,4,5,6,8,11, EN61000-3-2,3, EN60601-1-2, ENV50204
Connection ..... 2P,6P/ 3.96mm pitch, Molex P/N: 5277-02, 5273-06
Packing ..... 0.18kg ; 72pcs/ 15.1kg / 1.35CUFT (MPS-45)
0.20kg ; 72pcs/ 17.4kg / 1.35CUFT (MPD-45)
0.21kg ; 72pcs/ 18.0kg / 1.35CUFT (MPT-45)

❖ Single Output

Model No.	Output	Tol.	R&N	Effi.
MPS-45-3.3	3.3V, 0~8.0A	±3%	80mV	65%
MPS-45-5	5V, 0~8.0A	±3%	100mV	72%
MPS-45-7.5	7.5V, 0~5.4A	±3%	100mV	75%
MPS-45-12	12V, 0~3.7A	±2%	100mV	76%
MPS-45-13.5	13.5V, 0~3.3A	±2%	100mV	76%
MPS-45-15	15V, 0~3.0A	±2%	100mV	77%
MPS-45-24	24V, 0~1.9A	±2%	100mV	78%
MPS-45-27	27V, 0~1.7A	±2%	100mV	78%
MPS-45-48	48V, 0~1.0A	±2%	100mV	78%

❖ Dual Output

Model No.	Output	Tol.	R&N	Effi.	Max.
MPD-45A	5V, 0.4~5.0A	±4%	60mV	76%	40W
	12V, 0.2~2.5A	±7%	120mV		
MPD-45B	5V, 0.4~5.0A	±4%	60mV	78%	45W
	24V, 0.2~1.8A	±7%	150mV		

❖ Triple Output

Model No.	Output	Tol.	R&N	Effi.	Max.
MPT-45A	5V, 0.4~5.0A	±4%	60mV	73%	41W
	12V, 0.2~2.5A	±7%	120mV		
	-5V, 0.0~0.5A	±5%	60mV		
MPT-45B	5V, 0.4~5.0A	±4%	60mV	75%	43W
	12V, 0.2~2.5A	±7%	120mV		
	-12V, 0.0~0.5A	±5%	100mV		
MPT-45C	5V, 0.4~5.0A	±4%	60mV	75%	44W
	15V, 0.2~2.3A	±7%	120mV		
	-15V, 0.0~0.5A	±5%	100mV		

60W 1~3 Output Medical Type

- 4"x2" miniature size
- Universal AC input / Full range
- Medical safety approved
- Protections: Short circuit / Overload / Over voltage
- No load power consumption <0.75W (single output models only)
- Low leakage current <200uA
- 110% peak load capability
- High power density 6.57W/in^3
- Cooling by free air convection
- 3 years warranty
- Suitable for medical & IT applications

101.6x 50.8x 29 mm

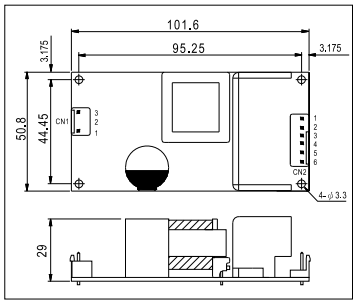

AC input voltage range .....90~264VAC; 127~370VDC
AC inrush current .....Cold start, 30A at 115VAC, 60A at 230VAC
DC adjustment range .....-5 ~ +10% rated output voltage (single output only)
Overload protection .....115~150% hiccup mode, auto-recovery
Over voltage protection .... CH1: 110%~135% rated output voltage
Leakage current .....Less than 200uA at 264VAC
Setup, rise, hold up time .. 500ms, 30ms, 50ms at full load and 230VAC (RPS-60)
200ms, 15ms, 70ms at full load and 230VAC (RPD/T-60)
Withstand voltage ..... I/P - O/P: 4kVAC, I/P - FG: 1.5kVAC, 1 minute
Working temperature .....-20ºC~70ºC (refer to output derating curve)
Safety standards .....UL60601-1, UL60950-1, TUV EN60601-1, EN60950-1 approved
EMC standards ..... EN55011 / EN55022 class B, EN61000-3-2,-3, EN61000-4-2,3,4,5,6,8,11, ENV50204, EN61000-6-2, EN60601-1-2, EN61204-3 medical level
Connection ..... 3,4P / 3.96mm pitch, JST P/N: B3P / B4P-VH (RPS-60)
3,6P / 3.96mm pitch, JST P/N: B3P / B6P-VH (RPD/T-60)
Packing ..... 0.15kg ; 96pcs / 15.4kg / 0.89CUFT

❖ Single Output

Model No.	Output	Tol.	R&N	Effi.
RPS-60-3.3	3.3V, 0~11A	±2%	80mV	74%
RPS-60-5	5V, 0~11A	±2%	80mV	79%
RPS-60-12	12V, 0~5.5A	±2%	120mV	83%
RPS-60-15	15V, 0~4.4A	±2%	150mV	84%
RPS-60-24	24V, 0~2.75A	±1%	240mV	85%
RPS-60-48	48V, 0~1.375A	±1%	300mV	86%

❖ Dual Output

Model No.	Output	Tol.	R&N	Effi.	Max.
RPD-60A	5V, 0.5~5.5A	+3%,-2%	80mV	78%	54W
	12V, 0.1~2.2A	±6%	80mV		
RPD-60B	5V, 0.5~3.85A	+3%,-2%	80mV	82%	59W
	24V, 0.1~1.65A	+8%,-4%	100mV		

❖ Triple Output

Model No.	Output	Tol.	R&N	Effi.	Max.
RPT-60A	5V, 0.5~4.4A	+3%,-2%	80mV	77%	51W
	12V, 0.1~2.2A	±6%	80mV		
	-5V, 0.1~0.55A	+9%,-8%	80mV		
RPT-60B	5V, 0.5~4.4A	+3%,-2%	80mV	78%	55W
	12V, 0.1~2.2A	±6%	80mV		
	-12V, 0.1~0.55A	+6%,-10%	100mV		
RPT-60C	5V, 0.5~4.4A	+3%,-2%	80mV	79%	55W
	15V, 0.1~0.65A	±6%	100mV		
	-15V, 0.1~0.55A	±8%	150mV		
RPT-60D	5V, 0.5~3.85A	+3%,-2%	80mV	79%	52W
	24V, 0.1~1.1A	±6%	150mV		
	12V, 0.1~0.55A	±8%	80mV		
RPT-6003	3.3V, 0.5~5.5A	+3%,-2%	80mV	75%	44W
	5V, 0.3~3.3A	±8%	80mV		
	12V, 0.1~0.77A	+6%,-10%	80mV		

65W 1~3 Output Medical Type

- Universal AC input / Full range
- Medical safety approved
- Protections: Short circuit / Overload / Over voltage
- Low leakage current≤0.3mA
- Fixed switching frequency at 45kHz
- 100% full load burn-in test
- 3 years warranty

127x 76x 42 mm

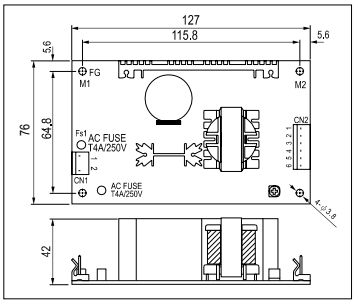

AC input voltage range .... 90~264VAC; 127~370VDC
AC inrush current ..... Cold start, 20A at 115VAC, 40A at 230VAC
DC adjustment range ..... CH1: ±10% rated output voltage
Overload protection ..... 73~105% hiccup mode, auto-recovery
Over voltage protection .... CH1: 115%~135% rated output voltage
Leakage current ..... Less than 0.3mA at 264VAC
Setup, rise, hold up time .. 800ms, 30ms, 50ms at full load and 230VAC
Withstand voltage ..... I/P-O/P: 4kVAC, I/P-FG: 1.5kVAC, 1 minute
Working temperature ..... -10ºC~ +60ºC (refer to output derating curve)
Safety standards ..... UL2601-1, TUV EN60601-1, IEC60601-1 approved
EMC standards ..... EN55011 class B, EN61000-4-2,3,4,5,6,8,11, EN61000-3-2,3, EN60601-1-2, ENV50204
Connection ..... 2P, 6P/ 3.96mm pitch, Molex: 5277-02, 5273-06
Packing ..... 0.23kg ; 54pcs/ 14.6kg / 1.35CUFT (MPS-65)
0.25kg ; 54pcs/ 16.0kg / 1.35CUFT (MPD-65)
0.27kg ; 54pcs/ 16.8kg / 1.35CUFT (MPT-65)

❖ Single Output

Model No.	Output	Tol.	R&N	Effi.
MPS-65-3.3	3.3V, 0~12A	±3%	80mV	66%
MPS-65-5	5V, 0~12A	±3%	100mV	74%
MPS-65-7.5	7.5V, 0~8.0A	±3%	100mV	76%
MPS-65-12	12V, 0~5.2A	±2%	100mV	77%
MPS-65-13.5	13.5V, 0~4.7A	±2%	100mV	78%
MPS-65-15	15V, 0~4.2A	±2%	100mV	79%
MPS-65-24	24V, 0~2.7A	±2%	100mV	80%
MPS-65-27	27V, 0~2.4A	±2%	100mV	80%
MPS-65-48	48V, 0~1.35A	±2%	100mV	80%

❖ Dual Output

Model No.	Output	Tol.	R&N	Effi.	Max.
MPD-65A	5V, 0.4~7.0A	±4%	60mV	75%	61W
	12V, 0.2~3.2A	±7%	150mV		
MPD-65B	5V, 0.4~6.0A	±4%	60mV	78%	66W
	24V, 0.2~2.6A	±7%	150mV		

❖ Triple Output

Model No.	Output	Tol.	R&N	Effi.	Max.
MPT-65A	5V, 0.4~7.0A	±4%	60mV	74%	60W
	12V, 0.2~3.2A	+10%,-7%	120mV		
	-5V, 0.0~0.7A	±5%	60mV		
MPT-65B	5V, 0.4~7.0A	±4%	60mV	74%	64W
	12V, 0.2~3.2A	+10%,-7%	160mV		
	-12V, 0.0~0.7A	±5%	100mV		
MPT-65C	5V, 0.4~7.0A	±4%	60mV	74%	65W
	15V, 0.2~2.6A	+10%,-7%	180mV		
	-15V, 0.0~0.7A	±5%	100mV		

Open Frame

75~160W 1~3 Output Medical Type

75W 1~3 Output Medical Type

- Universal AC input / Full range
- Medical safety approved
- Protections: Short circuit / Overload / Over voltage
- No load power consuption <0.75W (single output models only)
- Low leakage current <200uA
- Fixed switching frequency at 65kHz
- Free air convection for 75W and 100W with 23.5CFM forced air
- 3 years warranty
- Suitable for medical & IT applications

127x 76.2x 31 mm

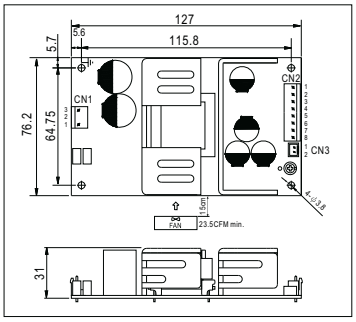

AC input voltage range ..... 90~264VAC; 127~370VDC
AC inrush current ..... Cold start, 25A at 115VAC, 50A at 230VAC
DC adjustment range ..... CH1: -5 ~ +10% rated output voltage
Overload protection ..... 140~180% hiccup mode, auto-recovery
Over voltage protection ..... CH1: 115%~135% rated output voltage
Leakage current ..... Less than 200uA at 264VAC
Setup, rise, hold up time .... 500ms, 30ms, 80ms at full load and 230VAC
Withstand voltage ..... I/P-O/P: 4kVAC, I/P-FG: 1.5kVAC, 1 minute
Working temperature ..... -20ºC ~ +70ºC (refer to output derating curve)
Safety standards ..... UL60601-1, TUV EN60601-1 approved
EMC standards ..... EN55011 / EN55022 class B, EN61000-3-2,-3, EN61000-4-2,3,4,5,6,8,11, ENV50204, EN61000-6-2, EN60601-1-2, EN61204-3 medical level
Connection ..... 3+8P / 3.96mm pitch, JST P/N: B3P / B8P-VH
Packing ..... 0.23kg ; 63pcs / 15.5kg / 1.35CUFT

❖ Single Output

Model No.	Output	Tol.	R&N	Effi.
RPS-75-3.3	3.3V, 0~20A	±2%	80mV	73%
RPS-75-5	5V, 0~18.7A	±2%	80mV	78%
RPS-75-12	12V, 0~8.3A	±1%	120mV	82%
RPS-75-15	15V, 0~6.7A	±1%	150mV	83%
RPS-75-24	24V, 0~4.2A	±1%	240mV	85%
RPS-75-36	36V, 0~2.8A	±1%	300mV	86%
RPS-75-48	48V, 0~2.1A	±1%	300mV	86%

❖ Dual Output

Model No.	Output	Tol.	R&N	Effi.	Max.
RPD-75A	5V, 1.0~9.5A	±2%	80mV	77%	96W
	12V, 0.3~4.0A	±6%	120mV		
RPD-75B	5V, 1.0~6.8A	±2%	80mV	79%	99W
	24V, 0.2~2.7A	±6%	200mV		

❖ Triple Output

Model No.	Output	Tol.	R&N	Effi.	Max.
RPT-75A	5V, 0.6~8.0A	±2%	80mV	76%	93W
	12V, 0.2~4.0A	±6%	120mV		
	-5V, 0.1~1.0A	±5%	120mV		
RPT-75B	5V, 0.6~8.0A	±2%	80mV	77%	100W
	12V, 0.2~4.0A	±6%	120mV		
	-12V, 0.1~1.0A	±5%	120mV		
RPT-75C	5V, 0.6~8.0A	±2%	80mV	77%	100W
	15V, 0.1~3.0A	±8%	150mV		
	-15V, 0.1~1.0A	±5%	150mV		
RPT-75D	5V, 0.6~7.0A	±2%	80mV	79%	95W
	24V, 0.1~2.0A	±8%	200mV		
	12V, 0.1~1.0A	±8%	120mV		
RPT-7503	3.3V, 0.7~7.0A	±4%	80mV	74%	81W
	5V, 0.0~8.0A	±6%	120mV		
	12V, 0.0~1.5A	+10%,-6%	120mV		

160W Medical Type with PFC Function

- Universal AC input / Full range
- Built-in active PFC function
- Protections: Short circuit / Overload / Over voltage / Over temperature
- Free air convection for 110W and 160W with 20.5 CFM forced air (RPS-160); Free air convection for 100W and 150W with 20.5 CFM forced air (RPD / T-160)
- 5"x3" compact size
- With power good and fail signal output
- Built-in remote sense function for 5~15V (RPS-160)
- Standby 5V@0.8A (G model)
- No load power consumption under 0.75W by PS-ON control (G model)
- 3 years warranty

127x 76.2x 34.6mm

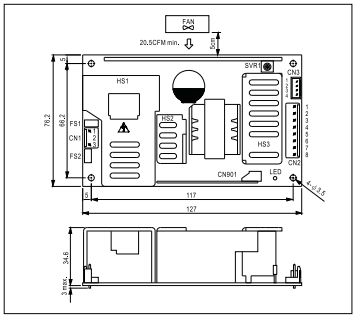

AC input voltage range ..... 90~264VAC; 127~370VDC
AC inrush current ..... Cold start, 35A at 115VAC, 70A at 230VAC
DC adjustment range ..... RPS-160: ±10% rated output voltage
RPD/T-160: 0~+10% for CH1
Overload protection ..... 105~135% hiccup mode, auto-recovery
Over voltage protection ..... CH1: 115%~135% shut off, re-power on to recovery
Leakage current ..... Less than 300uA at 240VAC
Setup, rise, hold up time ..... 1200ms, 30ms, 16ms at full load and 230VAC
Withstand voltage ..... I/P - O/P: 4kVAC, I/P - FG: 1.5kVAC, 1 minute
Working temperature ..... -20ºC~70ºC (refer to output derating curve)
Safety standards ..... UL60601-1, TUV EN60601-1 approved
EMC standards ..... EN55011/EN55022 class B, EN61000-4-2,3,4,5,6,8,11, EN61000-3-2,3, EN60601-1-2, ENV50204, EN61000-6-2 (RPS(G)-160)
Connection ..... 3+8+2(4)P/3.96mm pitch JST B3P / B8P-VH, B2B (B4B)-XH

❖ Single Output

Model No.	Output	Tol.	R&N	Effi.
RPS☐-160-5	5V, 0~30.0A	±4%	100mV	85%
RPS☐-160-12	12V, 0~12.9A	±3%	100mV	87%
RPS☐-160-15	15V, 0~10.3A	±3%	120mV	87%
RPS☐-160-24	24V, 0~6.5A	±2%	150mV	87%
RPS☐-160-48	48V, 0~3.25A	±2%	250mV	88%

❖ Dual Output

Model No.	Output	Tol.	R&N	Effi.	Max.
RPD☐-160B	5V, 1.0~12A	±2.5%	80mV	84%	150W
	24V, 0.2~3.6A	±6%	200mV		

❖ Triple Output

Model No.	Output	Tol.	R&N	Effi.	Max.
RPT☐-160A	5V, 0.6~14A	±2%	100mV	84%	141W
	12V, 0.2~5.5A	±5%	120mV		
	-5V, 0.1~1.0A	-5%,+7%	120mV		
RPT☐-160B	5V, 0.6~14A	±2%	100mV	84%	142W
	12V, 0.2~5.0A	±5%	120mV		
	-12V, 0.1~1.0A	-4%,+5%	120mV		
RPT☐-160C	5V, 0.6~14A	±2%	100mV	83%	139W
	15V, 0.1~3.6A	±4%	150mV		
	-15V, 0.1~1.0A	-5%,+7%	150mV		
RPT☐-160D	5V, 0.3~11A	±2%	100mV	83%	144W
	12V, 0.2~5.0A	±5%	120mV		
	24V, 0.15~1.2A	±4%	200mV		

☐ = blank, G; blank: basic function, G: with 5Vsb/0.8A & no load power consumption< 0.75W

120 & 200W 1~4 Output Medical Type

- Universal AC input / Full range
- PF> 0.95@230VAC (200W)
- Protections: Short circuit / Overload / Over voltage / OTP (200W)
- Leakage current≤180uA
- Built-in remote sense and remote ON/OFF control (200W)
- PG / PF signal output (optional for 120W)
- 80W / 140W free air convection, 120W / 200W with 25CFM forced air
- 100% full load burn-in test
- 3 years warranty
- Suitable for medical & IT applications

120W
177.8x 108x 35.5mm

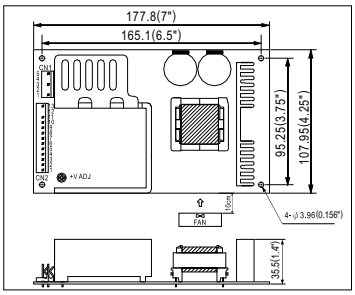

200W
177.8x 107.2x 35.5 mm

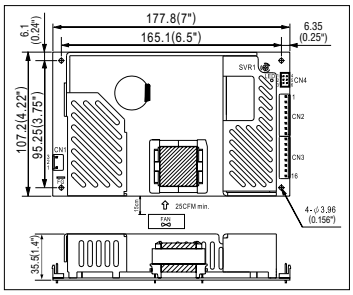

AC input voltage range ..... 90~264VAC; 127~370VDC
AC inrush current ..... Cold start, 35A at 115VAC, 60A at 230VAC
DC adjustment range ..... CH1: -5~+10% rated output voltage
Overload protection ..... 110~160% hiccup mode, auto-recovery
Over voltage protection ..... CH1: 115%~140% rated output voltage
Leakage current ..... Less than 180uA at 264VAC
Setup, rise, hold up time ..... 1000ms, 20ms, 16ms at full load and 230VAC
Withstand voltage ..... I/P - O/P: 4kVAC, I/P - FG: 1.5kVAC, 1 minute
Working temperature ..... -20ºC~70ºC (refer to output derating curve)
Safety standards ..... UL60601-1, TUV EN60601-1, IEC60601-1 approved; Design refer to UL60950-1, TUV EN60950-1
EMC standards ..... EN55011/EN55022 class B, EN61000-4-2,3,4,5,6,8,11, EN61000-3-2,3, EN60601-1-2, ENV50204, EN61000-6-2
Connection ..... 5P,13P/ 3.96mm pitch, Molex 5273-05, 5273-13 (120W)
3P, 20P / 3.96mm pitch, JST B3P/VH, Molex 5566-20 (MPS-200)
3P, 8Px2 / 3.96mm pitch, JSTB3P / B8Px2-VH (MPD/T/Q-200)
Packing ..... 0.55kg ; 24pcs / 14.5kg / 1.04CUFT (120W)
0.66kg ; 24pcs / 16.8kg / 1.04CUFT (200W)

❖ Single Output

Model No.	Output	Tol.	R&N	Effi.
MPS-120-3.3	3.3V, 0~24A	±3%	80mV	68%
MPS-120-5	5V, 0~22A	±3%	80mV	73%
MPS-120-12	12V, 0~10A	±2%	100mV	77%
MPS-120-15	15V, 0~8.0A	±2%	100mV	79%
MPS-120-24	24V, 0~5.0A	±2%	120mV	81%
MPS-120-48	48V, 0~2.5A	±2%	120mV	82%

Model No.	Output	Tol.	R&N	Effi.
MPS-200-3.3	3.3V, 0~40A	±2%	80mV	77%
MPS-200-5	5V, 0~40A	±2%	80mV	81%
MPS-200-12	12V, 0~16.7A	±2%	100mV	84%
MPS-200-15	15V, 0~13.4A	±2%	100mV	85%
MPS-200-24	24V, 0~8.4A	±1%	150mV	86%
MPS-200-48	48V, 0~4.2A	±1%	200mV	87%

❖ Dual Output

Model No.	Output	Tol.	R&N	Effi.	Max.
MPD-120A	5V, 2.0~12A	±2%	80mV	75%	110W
	12V, 0.5~6.0A	±7%	120mV		
MPD-120B	5V, 2.0~12A	±2%	80mV	76%	120W
	24V, 0.3~3.2A	±8%	250mV		

❖ Dual Output

Model No.	Output	Tol.	R&N	Effi.	Max.
MPD-200A	5V, 4.0~24A	±2%	80mV	82%	196W
	12V, 0.8~9.6A	+8%,-5%	120mV		
MPD-200B	5V, 4.0~24A	±2%	80mV	83%	196W
	24V, 0.4~4.8A	±6.5%	180mV		

❖ Triple Output

Model No.	Output	Tol.	R&N	Effi.	Max.
MPT-120A	5V, 2.0~12A	±2%	80mV	72%	111W
	12V, 0.4~5.8A	+8%,-6%	120mV		
	-5V, 0.0~1.0A	±5%	80mV		
MPT-120B	5V, 2.0~12A	±2%	80mV	73%	110W
	12V, 0.4~5.3A	±6%	120mV		
	-12V, 0.0~1.0A	±5%	80mV		
MPT-120C	5V, 2.0~11A	±2%	80mV	72%	119W
	15V, 0.4~4.4A	+6%,-7%	150mV		
	-15V, 0.0~1.0A	±5%	80mV		
MPT-120D	5V, 2.0~12A	±2%	80mV	74%	110W
	24V, 0.4~2.6A	+8%,-6%	300mV		
	12V, 0.0~1.0A	±5%	120mV		
MPT-200A	5V, 4.0~24A	±2%	80mV	80%	200W
	12V, 0.8~9.0A	±8%	120mV		
	-5V, 0.0~2.4A	±5%	80mV		
MPT-200B	5V, 4.0~24A	±2%	80mV	80%	196W
	12V, 0.6~7.2A	±8%	120mV		
	-12V, 0.0~2.4A	±5%	80mV		
MPT-200C	5V, 4.0~24A	±2%	80mV	80%	201W
	15V, 0.5~5.6A	±8%	150mV		
	-15V, 0.0~2.4A	±5%	80mV		
MPT-200D	5V, 4.0~24A	±2%	80mV	81%	196W
	24V, 0.3~3.6A	±8%	180mV		
	12V, 0.0~2.4A	±5%	80mV		

❖ Quad Output

Model No.	Output	Tol.	R&N	Effi.	Max.
MPQ-120B	5V, 2.0~11A	±2%	80mV	71%	111W
	12V, 0.5~5.0A	±6%	120mV		
	-5V, 0.0~1.0A	±5%	80mV		
	-12V, 0.0~1.0A	±5%	80mV		
MPQ-120C	5V, 2.0~11A	±2%	80mV	71%	110W
	15V, 0.5~3.8A	+6%,-7%	150mV		
	-5V, 0.0~1.0A	±5%	80mV		
	-15V, 0.0~1.0A	±5%	80mV		
MPQ-120D	5V, 2.0~11A	±2%	80mV	74%	120W
	12V, 0.2~1.1A	+8%,-6%	150mV		
	24V, 0.3~2.3A	±8%	300mV		
	-12V, 0.0~1.0A	±5%	80mV		
MPQ-120E	5V, 2.0~11A	±2%	80mV	73%	109W
	12V, 0.5~3.3A	±6%	120mV		
	15V, 0.0~1.0A	±8%	80mV		
	24V, 0.0~1.0A	±5%	80mV		
MPQ-200B	5V, 3.0~18A	±2%	80mV	78%	193W
	12V, 0.7~8.4A	±8%	120mV		
	-5V, 0.0~2.4A	±5%	80mV		
	-12V, 0.0~2.4A	±5%	80mV		
MPQ-200C	5V, 3.0~18A	±2%	80mV	78%	190W
	15V, 0.5~6.0A	±6%	150mV		
	-5V, 0.0~2.4A	±5%	80mV		
	-15V, 0.0~2.4A	±5%	80mV		
MPQ-200D	5V, 3.0~18A	±2%	80mV	79%	195W
	24V, 0.3~3.6A	±8%	180mV		
	12V, 0.0~2.4A	±5%	80mV		
	-12V, 0.0~2.4A	±5%	80mV		
MPQ-200F	5V, 3.0~18A	±2%	80mV	81%	200W
	24V, 0.3~3.3A	±8%	180mV		
	15V, 0.0~2.4A	±5%	80mV		
	-15V, 0.0~2.4A	±5%	80mV		

Open Frame

5~25W Single and Dual Output

5W Single Output Switching Power Supply

- Universal AC input / Full range
- Protections: Short circuit / Overload / Over voltage / Over temp.
- Cooling by free air convection
- Fixed switching frequency at 67kHz
- Low leakage current <0.5mA
- 100% full load burn-in test
- Low cost, high reliability
- 2 years warranty

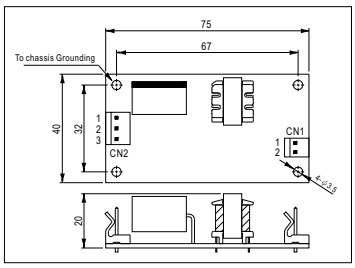

AC input voltage range ..... 85~264VAC; 120~370VDC
AC inrush current ..... Cold start, 30A at 230VAC
Overload protection ..... >105% hiccup mode, auto-recovery
Over voltage protection ..... 115%~135% rated output voltage
Over temp. protection ..... U1, Tj:140°C, hiccup mode, auto-recovery
Leakage current ..... Less than 0.5mA at 240VAC
Withstand voltage ..... I/P-O/P: 3kVAC, I/P-FG:1.5kVAC, 1minute
Working temperature ..... -10~60°C (refer to output derating curve)
Safety standards ..... UL60950-1 CB approval by TUV
EMC standards ..... EN55022 class B, EN61000-3-2,3, EN61000-4-2,3,4,5,6,8,11
Connection ..... 3P, 2P/ 3.96mm pitch, Molex 5285-03,5273-02
Packing ..... 0.05kg ; 120pcs / 6.25kg / 1.0CUFT

Model No.	Output	Tol.	R&N	Effi.
PS-05-5	5V, 0~1.0A	±2%	100mV	70%
PS-05-12	12V, 0~0.45A	±2%	120mV	75%
PS-05-15	15V, 0~0.35A	±2%	120mV	75%
PS-05-24	24V, 0~0.22A	±2%	200mV	76%
PS-05-48	48V, 0~0.11A	±1%	200mV	76%

15W Single Output Switching Power Supply

- Universal AC input / Full range
- Protections: Short circuit / Overload / Over voltage / Over temp.
- Cooling by free air convection
- Fixed switching frequency at 67kHz
- Low leakage current <0.5mA
- 100% full load burn-in test
- Low cost, high reliability
- 2 years warranty

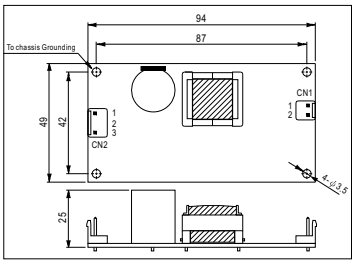

AC input voltage range ..... 85~264VAC; 120~370VDC
AC inrush current ..... Cold start, 40A at 230VAC
Overload protection ..... >105% hiccup mode, auto-recovery
Over voltage protection ..... 115%~135% rated output voltage
Over temp. protection ..... U1, Tj:140°C, hiccup mode, auto-recovery
Leakage current ..... Less than 0.5mA at 240VAC
Withstand voltage ..... I/P-O/P: 3kVAC, I/P-FG:1.5kVAC, 1minute
Working temperature ..... -10~60°C (refer to output derating curve)
Safety standards ..... EN60950-1 CB approval by TUV
EMC standards ..... EN55022 class B, EN61000-3-2,3, EN61000-4-2,3,4,5,6,8,11
Connection ..... 3P, 2P/ 3.96mm pitch, JST B3P/B2P-VH
Packing ..... 0.083kg ; 120pcs / 10.96kg

Model No.	Output	Tol.	R&N	Effi.
PS-15-5	5V, 0~2.80A	±2%	100mV	74%
PS-15-12	12V, 0~1.25A	±2%	120mV	77%
PS-15-15	15V, 0~1.00A	±2%	120mV	78%
PS-15-24	24V, 0~0.625A	±2%	150mV	79%
PS-15-48	48V, 0~0.313A	±2%	200mV	77%

25W 1~2 Output Switching Power Supply

- Universal AC input / Full range
- Protections: Short circuit / Overload / Over voltage / Over temp.
- Cooling by free air convection
- Fixed switching frequency at 100kHz
- Low leakage current <0.5mA
- 100% full load burn-in test
- Low cost, high reliability
- 2 years warranty

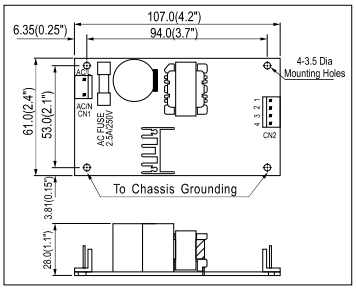

AC input voltage range ..... 85~264VAC; 120~370VDC
AC inrush current ..... Cold start, 36A at 230VAC
Overload protection ..... >105% hiccup mode, auto-recovery
Over voltage protection ..... 115%~135% rated output voltage
Over temp. protection ..... U1, Tj:135°C, power shutdown
Leakage current ..... Less than 0.5mA at 240VAC
Withstand voltage ..... I/P-O/P: 3kVAC, I/P-FG:1.5kVAC, 1minute
Working temperature ..... -10~60°C (refer to output derating curve)
Safety standards ..... UL60950-1, TUV EN60950-1 approved
EMC standards ..... EN55022 class B, EN61000-3-2,3, EN61000-4-2,3,4,5
Connection ..... 3P, 4P/ 3.96mm pitch, Molex P/N: 41791-03, 04
Packing ..... 0.14kg ; 96pcs / 15.0kg / 1.30CUFT(PS-25)
0.15kg ; 96pcs / 15.9kg / 1.30CUFT(PD-25)
0.13kg ; 96pcs / 15.4kg / 1.30CUFT(PD-2503)

❖ Single Output

Model No.	Output	Tol.	R&N	Effi.
PS-25-3.3	3.3V, 0~5.0A	±3%	80mV	66%
PS-25-5	5V, 0~5.0A	±2%	80mV	74%
PS-25-7.5	7.5V, 0~3.3A	±2%	80mV	76%
PS-25-12	12V, 0~2.1A	±2%	100mV	78%
PS-25-13.5	13.5V, 0~1.9A	±2%	100mV	78%
PS-25-15	15V, 0~1.7A	±2%	100mV	78%
PS-25-24	24V, 0~1.0A	±2%	240mV	79%
PS-25-27	27V, 0~0.9A	±2%	240mV	79%
PS-25-48	48V, 0~0.5A	±2%	350mV	79%

❖ Dual Output

Model No.	Output	Tol.	R&N	Effi.	Max.
PD-25A	5V, 0.2~2.5A	±2%	50mV	71%	25W
	12V, 0.1~1.5A	±6%	150mV		
PD-25B	5V, 0.2~2.0A	±2%	50mV	77%	25W
	24V, 0.1~1.0A	±6%	200mV		
PD-2505	5V, 0.1~3.0A	±6%	50mV	73%	25W
	-5V, 0.1~2.5A	±6%	50mV		
PD-2512	12V, 0.1~1.2A	±4%	50mV	74%	24W
	-12V, 0.1~1.2A	±4%	50mV		
PD-2515	15V, 0.1~1.0A	±4%	50mV	75%	24W
	-15V, 0.1~1.0A	±4%	50mV		
PD-2503	3.3V, 0.2~5.0A	±2%	50mV	72%	25W
	5V, 0.1~4.0A	+5%,-8%	50mV		

Open Frame 35~75W Single, Dual, and Triple Output

35W Single Output Switching Power Supply

- 4"x2"x 0.95" compact size
- Universal AC input / Full range
- Cooling by free air convection
- Protections: Short circuit / Overload / Over voltage
- 2 years warranty

101.6x 50.8x 24 mm

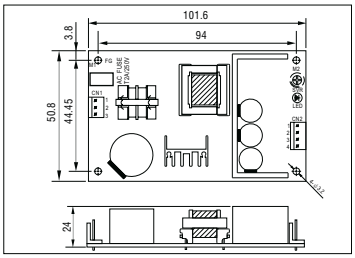

AC input voltage range ..... 90~264VAC; 120~370VDC
DC adjustment range ..... ±10% rated output voltage
Overload protection ..... 105%~160% hiccup mode, auto-recovery
Over voltage protection ..... 115%~150% rated output voltage
Withstand voltage ..... I/P-O/P: 3.0kVAC, I/P-FG:1.5kVAC, 1minute
Working temperature .....-20°C~+65°C (refer to output derating curve)
Safety standards ..... UL60950-1, TUV EN60950-1 approved
EMC standards ..... EN55022 class B, EN61000-3-2,3, EN61000-4-2,3,4,5,6,8,11; ENV50204
Connection ..... 3+4P / 3.96mm pitch, JST B3P/B4P-VH
Packing ..... 0.124kg; 96pcs / 12.9kg / 0.8CUFT

Model No.	Output	Tol.	R&N	Effi.
PS-35-3.3	3.3V, 0~6.0A	±2%	80mV	70%
PS-35-5	5V, 0~6.0A	±2%	100mV	78%
PS-35-7.5	7.5V, 0~4.7A	±2%	100mV	80%
PS-35-12	12V, 0~3.0A	±1%	120mV	81%
PS-35-13.5	13.5V, 0~2.6A	±1%	120mV	81%
PS-35-15	15V, 0~2.4A	±1%	150mV	81%
PS-35-24	24V, 0~1.5A	±1%	200mV	85%
PS-35-48	48V, 0~0.75A	±1%	240mV	84%

75W Single Output with PFC Function

- Universal AC input / Full range
- Built-in active PFC function, PF>0.95
- Protections: Short circuit / Overload / Over voltage
- No load power consumption <0.5W
- Cooling by free air convection
- LED indicator for power on
- ENERGY STAR level V(CEC) compliant
- Optional case available
- 3 years warranty

UL / CUL / TUV / CB / CE pending

175x 60x 30 mm
195x 68x 37 mm

AC input voltage range ..... 90~264VAC; 127~370VDC
AC inrush current ..... Cold start, 60A at 230VAC
DC adjustment range ..... ±10% rated output voltage
Overload protection ..... 105%~135% hiccup mode, auto-recovery
Over voltage protection ..... 115%~135% rated output voltage
Leakage current ..... Less than 1mA at 240VAC
Setup, rise, hold up time .... 1000ms, 20ms, 20ms at full load and 230VAC
Withstand voltage ..... I/P-O/P: 3kVAC, I/P-FG: 1.5kVAC, O/P-FG: 0.5kVAC
Working temperature .....-30°C~+70°C (refer to output derating curve)
Safety standards ..... Design refer to UL60905-1, TUV EN60950-1
EMC standards ..... EN55022 class B, EN61000-3-2,-3, EN61000-4-2,3,4,5,6,8,11, ENV50204,
Connection .....3+6P / 3.96mm pitch, Molex 5273-03 / 5273-06

Model No.	Output	Tol.	R&N	Effi.
ELP-75-3.3	3.3V, 0~15A	±2%	80mV	80%
ELP-75-5	5V, 0~15A	±2%	80mV	82%
ELP-75-12	12V, 0~6.25A	±2%	120mV	88%
ELP-75-15	15V, 0~5A	±2%	150mV	88%
ELP-75-24	24V, 0~3.15A	±1%	240mV	89%
ELP-75-36	36V, 0~2.1A	±1%	280mV	89%
ELP-75-48	48V, 0~1.6A	±1%	300mV	89%

45W 1~3 Output Switching Power Supply

- Universal AC input / Full range
- Protections: Short circuit / Overload / Over voltage
- Cooling by free air convection
- Fixed switching frequency at 65kHz
- Low leakage current <0.5mA
- 100% full load burn-in test
- Low cost, high reliability
- 2 years warranty

127x 76x 28 mm

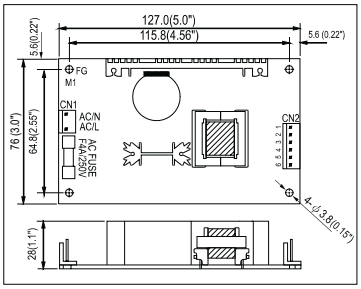

AC input voltage range ...90~264VAC; 120~370VDC
AC inrush current .....Cold start, 15A at 115VAC, 30A at 230VAC
DC adjustment range .....CH1: -5~+10% rated output voltage
Overload protection .....53~75W hiccup mode, auto-recovery
Over voltage protection ..CH1: 115%~135% rated output voltage
Leakage current .....Less than 0.5mA at 240VAC
Withstand voltage ..... I/P-O/P: 3kVAC, I/P-FG:1.5kVAC, 1minute
Working temperature .....-10~60°C (refer to output derating curve)
Safety standards ..... UL60950-1, TUV EN60950-1, CCC GB4943 approved
EMC standards ..... EN55022 class B, EN61000-3-2,3, EN61000-4-2,3,4,5,6,8,11, ENV50204, GB9254
Connection ..... 2P, 6P/ 3.96mm pitch, Molex 5277-02 / 5273-06
Packing ..... 0.19kg ; 72pcs / 15.6kg / 1.35CUFT(PS-45)
0.20kg ; 72pcs / 16.0kg / 1.35CUFT(PD-45)
0.21kg ; 72pcs / 17.0kg / 1.35CUFT(PT-45)

❖ Single Output

Model No.	Output	Tol.	R&N	Effi.
PS-45-3.3	3.3V, 0~8.0A	±3%	80mV	69%
PS-45-5	5V, 0~8.0A	±3%	100mV	74%
PS-45-7.5	7.5V, 0~5.4A	±3%	100mV	75%
PS-45-12	12V, 0~3.7A	±2%	100mV	76%
PS-45-13.5	13.5V, 0~3.3A	±2%	100mV	77%
PS-45-15	15V, 0~3.0A	±2%	100mV	77%
PS-45-24	24V, 0~1.9A	±2%	100mV	78%
PS-45-27	27V, 0~1.7A	±2%	100mV	78%
PS-45-48	48V, 0~1.0A	±2%	100mV	78%

❖ Dual Output

Model No.	Output	Tol.	R&N	Effi.	Max.
PD-45A	5V, 0.4~5.0A	±4%	50mV	77%	40W
	12V, 0.2~2.5A	±7%	120mV		
PD-45B	5V, 0.4~5.0A	±4%	50mV	78%	45W
	24V, 0.2~1.8A	±7%	120mV		

❖ Triple Output

Model No.	Output	Tol.	R&N	Effi.	Max.
PT-45A	5V, 0.4~5.0A	±4%	50mV	75%	41W
	12V, 0.2~2.5A	±7%	120mV		
	-5V, 0.0~0.5A	±5%	50mV		
PT-45B	5V, 0.4~5.0A	±4%	50mV	75%	43W
	12V, 0.2~2.5A	±7%	120mV		
	-12V, 0.0~0.5A	±5%	100mV		
PT-45C	5V, 0.4~5.0A	±4%	50mV	75%	44W
	15V, 0.2~2.3A	±7%	120mV		
	-15V, 0.0~0.5A	±5%	100mV		

Open Frame

45~65W Single, Dual, and Triple Output

45 & 65W Triple Output with 3.3V Channel

- Universal AC input / Full range
- Total power for CH1+2: 35W (PT-45)
- Total power for CH1+2: 54W (PT-65)
- Protections: Short circuit / Overload / Over voltage
- Fixed switching frequency at 65kHz
- Cooling by free air convection
- 100% full load burn-in test
- 2 years warranty

PT-4503
127x 76x 28 mm

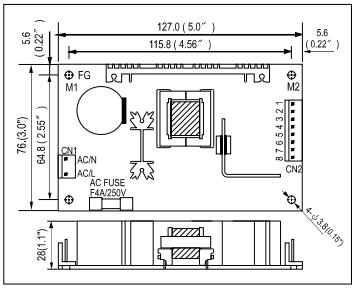

PT-6503
127x 76x 42 mm

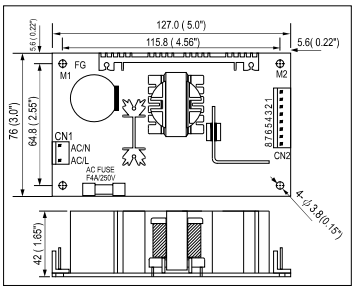

AC input voltage range ..... 90~264VAC; 127~370VDC
AC inrush current ..... Cold start, 20A at 115VAC, 40A at 230VAC
DC adjustment range ..... 3.3V: ±10% rated output voltage
Overload protection ..... 120%~160% hiccup mode, auto-recovery
Over voltage protection ..... 5V: 115%~135% rated output voltage
Leakage current ..... Less than 1.0mA at 240VAC
Setup, rise, hold up time ..... 800ms, 50ms, 60ms at full load and 230VAC
Withstand voltage ..... I/P-O/P: 3kVAC, I/P-FG:1.5kVAC, 1minute
Working temperature ..... -10~60°C (refer to output derating curve)
Safety standards ..... UL60950-1, TUV EN60950-1 approved
EMC standards ..... EN55022 class B, EN61000-3-2,3, EN61000-4-2,3,4,5,6,11
Connection ..... 2P, 8P/ 3.96mm pitch, Molex: 5277-02, 5273-08
Packing ..... 0.23kg ; 72pcs / 17.6kg / 1.35CUFT(PT-4503)
0.28kg ; 54pcs / 16.2kg / 1.35CUFT(PT-6503)

❖ Triple Output (45W)

Model No.	Output	Tol.	R&N	Effi.	Max.
PT-4503	3.3V, 0.0~5.0A	±2%	50mV	72%	45W
	5V, 0.2~7.0A	+4%,-2%	50mV		
	12V, 0.0~1.2A	±4%	100mV		

❖ Triple Output (65W)

Model No.	Output	Tol.	R&N	Effi.	Max.
PT-6503	3.3V, 0.0~7.0A	±3%	50mV	72%	62W
	5V, 0.2~10A	+4%,-2%	50mV		
	12V, 0.0~1.2A	±4%	100mV		

We are a TQM (Total Quality Management) company and ISO-9001 certified since 1994.

We provide specification, drawing, test report and more information, please visit our website —
http://www.meanwell.com

To satisfy our customers is our goal —
- High Quality
- Low Cost
- Prompt Delivery
- Best Service

65W 1~3 Output Switching Power Supply

- Universal AC input / Full range
- Protections: Short circuit / Overload / Over voltage
- Cooling by free air convection
- Fixed switching frequency at 65kHz
- Low leakage current <0.5mA
- 100% full load burn-in test
- Low cost, high reliability
- 2 years warranty

127x 76x 42 mm

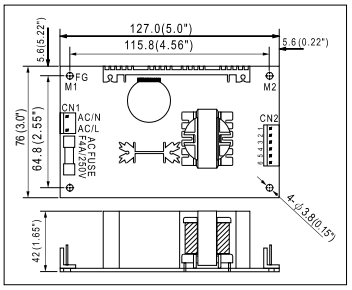

AC input voltage range ..... 90~264VAC; 120~370VDC
AC inrush current ..... Cold start, 20A at 115VAC, 40A at 230VAC
DC adjustment range ..... CH1: -5~+10% rated output voltage
Overload protection ..... 73~105W hiccup mode, auto-recovery
Over voltage protection ..... CH1: 115%~135% rated output voltage
Leakage current ..... Less than 0.5mA at 240VAC
Setup, rise, hold up time ..... 800ms, 20ms, 60ms at full load and 230VAC
Withstand voltage ..... I/P-O/P: 3kVAC, I/P-FG:1.5kVAC, 1minute
Working temperature ..... 0~45°C@100%, -10°C@80%, 60°C@50% load
Safety standards ..... UL60950-1, TUV EN60950-1, CCC GB4943 approved
EMC standards ..... EN55022 class B, EN61000-3-2,3, EN61000-4-2,3,4,5,6,8,11, ENV50204, GB9254
Connection ..... 2P, 6P/ 3.96mm pitch, Molex P/N: 5277-02, 5273-06
Packing ..... 0.21kg ; 54pcs / 14.2kg / 1.35CUFT(PS-65)
0.24kg ; 54pcs / 15.0kg / 1.35CUFT(PD-65)
0.25kg ; 54pcs / 15.9kg / 1.35CUFT(PT-65)

❖ Single Output

Model No.	Output	Tol.	R&N	Effi.
PS-65-3.3	3.3V, 0~12A	±3%	80mV	69%
PS-65-5	5V, 0~12A	±3%	100mV	76%
PS-65-7.5	7.5V, 0~8.0A	±3%	100mV	79%
PS-65-12	12V, 0~5.2A	±2%	100mV	79%
PS-65-13.5	13.5V, 0~4.7A	±2%	100mV	79%
PS-65-15	15V, 0~4.2A	±2%	100mV	79%
PS-65-24	24V, 0~2.7A	±2%	100mV	80%
PS-65-27	27V, 0~2.4A	±2%	100mV	80%
PS-65-48	48V, 0~1.35A	±2%	100mV	80%

❖ Dual Output

Model No.	Output	Tol.	R&N	Effi.	Max.
PD-65A	5V, 0.4~7.0A	±4%	50mV	78%	61W
	12V, 0.2~3.2A	±7%	120mV		
PD-65B	5V, 0.4~6.0A	±4%	50mV	81%	66W
	24V, 0.2~2.6A	±7%	150mV		

❖ Triple Output

Model No.	Output	Tol.	R&N	Effi.	Max.
PT-65A	5V, 0.4~7.0A	±4%	50mV	76%	60W
	12V, 0.2~3.2A	±7%	120mV		
	-5V, 0.0~0.7A	±5%	50mV		
PT-65B	5V, 0.4~7.0A	±4%	50mV	77%	64W
	12V, 0.2~3.2A	±7%	120mV		
	-12V, 0.0~0.7A	±5%	100mV		
PT-65C	5V, 0.4~7.0A	±4%	50mV	77%	65W
	15V, 0.2~2.6A	±7%	120mV		
	-15V, 0.0~0.7A	±5%	100mV		
PT-65D	5V, 0.5~5.0A	±4%	50mV	79%	68W
	12V, 0.2~4.0A	±6%	100mV		
	24V, 0.2~1.3A	±6%	200mV		

Open Frame

65~110W Dual, Triple, and Quad Output

65W 2~3 Output Switching Power Supply

- Universal AC input / Full range
- Protections: Short circuit / Overload / Over voltage
- Cooling by free air convection
- 12V or 24V high peak current capability
- 60~65W free air convection, 77~80W with 18 CFM forced air
- Low leakage current < 1mA
- 100% full load burn-in test
- Optional case available
- 2 years warranty capability

127x 76x 29 mm

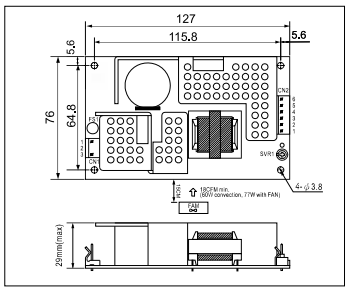

▶ With Optional Case

130x 84.4x 37 mm

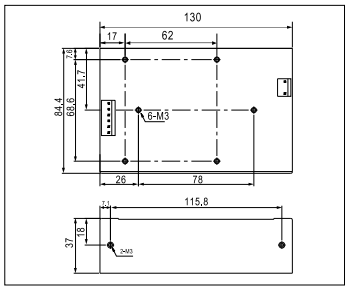

AC input voltage range ..... 90~264VAC; 120~370VDC
AC inrush current ..... Cold start, 25A at 115VAC, 50A at 230VAC
DC adjustment range ..... CH1 12V: 11.4~12.8V, 24V: 22.8~26.4V
Overload protection ..... 90~125W hiccup mode, auto-recovery
Over voltage protection ..... CH1: 115%~135% rated output voltage
Leakage current ..... Less than 1mA at 240VAC
Setup, rise, hold up time ..... 800ms, 20ms, 20ms at full load and 230VAC
Withstand voltage ..... I/P-O/P: 3kVAC, I/P-FG:1.5kVAC, 1minute
Working temperature ..... -20~60°C(refer to output derating curve)
Safety standards ..... UL60950-1, TUV EN60950-1 approved
EMC standards ..... EN55022 class B, EN61000-3-2,3, EN61000-4-2,3,4,5,6,8,11, ENV50204
Connection ..... 3P, 6P/ 3.96mm pitch, Molex P/N: 5273-03, 5273-06
Packing ..... 0.24kg ; 63pcs / 16.0kg / 1.35CUFT

❖ Dual Output

Model No.	Output	Tol.	R&N	Effi.	Max.
RPD-65C	12V, 0~5.8A	±2%	120mV	79%	60W
	5V, 0~1.5A	±5%	50mV		
RPD-65D	24V, 0~2.9A	±2%	150mV	81%	60W
	5V, 0~1.5A	±5%	50mV		

❖ Triple Output

Model No.	Output	Tol.	R&N	Effi.	Max.
RPT-65E	12V, 0.18~5.8A	±2%	120mV	77%	63W
	5V, 0.0~1.5A	±5%	100mV		
	-5V, 0.0~0.7A	±5%	120mV		
RPT-65F	12V, 0.18~5.8A	±2%	150mV	77%	66W
	5V, 0.0~1.5A	±5%	100mV		
	-12V, 0.0~0.7A	±5%	150mV		
RPT-65G	24V, 0.09~2.9A	±2%	150mV	81%	66W
	5V, 0.0~1.5A	±5%	50mV		
	12V, 0.0~0.7A	±5%	100mV		

100~110W 2, 4 Output Switching Power Supply

- Universal AC input / Full range
- Power good signal output (option)
- Protections: Short circuit / Overload / Over voltage
- Cooling by free air convection
- 2 years warranty
- To be discontinuted. Using MPD-120 & MPQ-120 as replacement for any new applications is highly recommend.

PD-110
178x 108x 46 mm

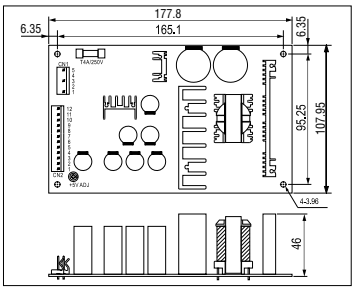

PQ-100
178x 108x 46 mm

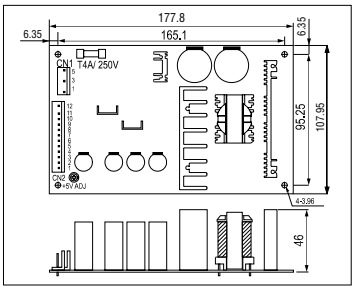

AC input voltage range .. 90~264VAC; 127~370VDC
AC inrush current ..... Cold start, 50A at 230VAC
DC adjustment range ..... CH1: -5~+10% rated output voltage
Overload protection ..... 105%~135% hiccup mode, auto-recovery
Over voltage protection .. CH1: 115%~135% rated output voltage
Withstand voltage ..... I/P-O/P: 3kVAC, I/P-FG:1.5kVAC, 1minute
Working temperature ..... -10°C~60°C (refer to output derating curve)
Safety standards ..... UL60950-1, TUV EN60950-1 approved
EMC standards ..... EN55022 class B, EN61000-3-2,3, EN61000-4-2,3,4,5,6,11, ENV50204
Connection ..... 5+12P/ 3.96mm pitch, Molex: 5273-05,12(PD-110)
5+6+7P/ 3.96mm pitch, Molex: 5273-05,06,07(PQ-100)
Packing ..... 0.51kg ; 24pcs / 13.1kg / 1.19CUFT (PD-110)
0.56kg ; 24pcs / 14.5kg / 1.19CUFT (PQ-100)

❖ Dual Output

Model No.	Output	Tol.	R&N	Effi.	Max.
PD-110A	5V, 0.5~5.0A	±2%	100mV	75%	103W
	12V, 0.5~6.5A	±6%	150mV		
PD-110B	5V, 0.5~5.0A	±2%	100mV	78%	109W
	24V, 0.5~3.5A	±6%	200mV		

❖ Quad Output

Model No.	Output	Tol.	R&N	Effi.	Max.
PQ-100B	5V, 2.0~10A	±3%	80mV	72%	101W
	12V, 0.5~4.5A	±12%	250mV		
	-5V, 0.0~1.0A	±6%	80mV		
	-12V, 0.0~1.0A	±6%	120mV		
PQ-100C	5V, 2.0~8.0A	±2%	80mV	74%	103W
	15V, 0.5~4.0A	±6%	150mV		
	-5V, 0.0~1.0A	±6%	80mV		
	-15V, 0.0~1.0A	±6%	150mV		
PQ-100D	5V, 2.0~5.0A	±2%	80mV	77%	103W
	12V, 0.5~4.5A	±6%	120mV		
	24V, 0.4~2.0A	±10%	180mV		
	-12V, 0.0~1.0A	±6%	120mV		
PQ-100E	5V, 2.0~8.0A	±2%	80mV	74%	99W
	12V, 0.5~3.0A	±6%	120mV		
	15V, 0.0~1.0A	±6%	150mV		
	24V, 0.0~1.0A	±6%	120mV		

Open Frame 100~125W Single, Triple, and Quad Output

100W Quad Output with PFC Function

- Universal AC input / Full range
- PF>0.98@115VAC; >0.95@230VAC
- Protections: Short circuit / Overload / Over voltage
- Cooling by free air convection
- 100% full load burn-in test
- 3 years warranty

178x 108x 38 mm

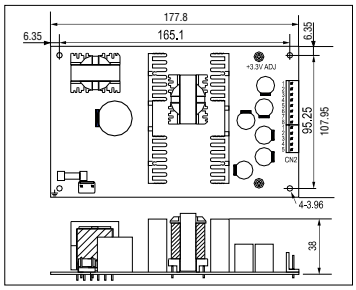

AC input voltage range .. 90~264VAC; 127~370VDC
AC inrush current ..... Cold start, 40A at 230VAC
DC adjustment range ..... CH1: -5~+10% (PPQ-1003: CH1&2 -5~+10%)
Overload protection ..... 105%~135% hiccup mode, auto-recovery (PPQ-100)
105%~135% constant current, auto-recovery (PPQ-1003)
Over voltage protection .. 3.6V~4.3V for 3.3V ; 5.75V~6.75V for 5.0V
Leakage current ..... Less than 3.5mA at 240VAC (PPQ-1003: <1mA)
Setup, rise, hold up time .. 800ms, 50ms, 18ms at full load and 230VAC
Withstand voltage ..... I/P-O/P: 3kVAC, I/P-FG:1.5kVAC, 1minute
Working temperature ..... -10°C~60°C (refer to output derating curve)
Safety standards ..... UL60950-1, TUV EN60950-1 approved
EMC standards ..... EN55022 class B, EN61000-3-2,3,
EN61000-4-2,3,4,5,6,8,11, ENV50204
Connection ..... 5P+5P+8P/ 3.96mm pitch, P/N:JST B5/5/8P-VH (PPQ-100)
3P+5P+8P/ 3.96mm pitch, P/N:JST B3/5/8P-VH (PPQ-1003)
Packing ..... 0.62kg ; 24pcs / 15.5kg / 1.34CUFT (PPQ-1003)
0.62kg ; 24pcs / 15.9kg / 1.34CUFT (PPQ-100)

Model No.	Output	Tol.	R&N	Effi.	Max.
PPQ-1003A	3.3V, 0.0~15A	±3%	100mV	72%	109W
	5V, 2.0~15A	±3%	100mV		
	12V, 0.2~3.0A	±6%	150mV		
	-5V, 0.0~1.0A	±6%	100mV		
PPQ-1003B	3.3V, 0.0~15A	±3%	100mV	72%	111W
	5V, 2.0~15A	±3%	100mV		
	12V, 0.2~3.0A	±6%	150mV		
	-12V, 0.0~1.0A	±6%	120mV		
PPQ-1003C	3.3V, 0.0~15A	±3%	100mV	72%	110W
	5V, 2.0~15A	±3%	100mV		
	15V, 0.2~3.0A	+10%,-5%	180mV		
	-15V, 0.0~1.0A	±6%	150mV		
PPQ-1003D	3.3V, 0.0~15A	±3%	100mV	72%	114W
	5V, 2.0~15A	±3%	100mV		
	12V, 0.2~3.0A	±6%	150mV		
	24V, 0.0~1.0A	±6%	150mV		
PPQ-100B	5V, 2.0~15A	±3%	100mV	75%	101W
	12V, 0.3~4.0A	±8%	150mV		
	-12V, 0.0~1.0A	±5%	100mV		
	-5V, 0.0~1.0A	±5%	100mV		
PPQ-100C	5V, 2.0~15A	±3%	100mV	76%	101W
	15V, 0.3~4.0A	-6%,+10%	150mV		
	-15V, 0.0~1.0A	±5%	100mV		
	-5V, 0.0~1.0A	±5%	100mV		
PPQ-100D	5V, 2.0~10A	±3%	100mV	78%	102W
	24V, 0.3~4.0A	±8%	200mV		
	12V, 0.0~1.0A	±5%	100mV		
	-12V, 0.0~1.0A	±5%	100mV		

125W 1,3 Output with PFC Function

- Universal AC input/ Full range
- PF>0.98@115VAC, >0.93@230VAC
- High power density 6.117W/in³
- 3"x5" miniature size
- Protections: Short circuit / Overload / Over voltage
- Built-in remote sense for PPS-125
- LED indicator for power on
- Free air convection for 100W and 125W with 18 CFM forced air
- 100% full load burn-in test
- 3 years warranty

127x 76.2x 34.6 mm

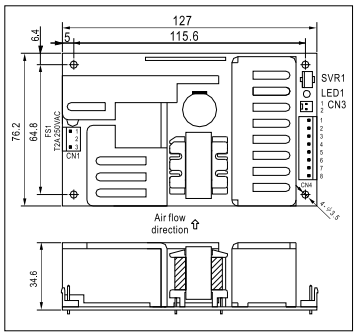

AC input voltage range ..... 90~264VAC; 127~370VDC
AC inrush current ..... Cold start, 24A at 230VAC
DC adjustment range ..... CH1: ±5% rated output voltage
Overload protection ..... 130~160% fold back current limiting, auto-recovery
Over voltage protection ..... CH1:110~135% rated output voltage
Leakage current ..... Less than 2.0 mA at 240VAC
Setup, rise, hold up time .... 1000ms, 30ms, 24ms at full load and 230VAC
Withstand voltage ..... I/P-O/P: 3kVAC, I/P-FG:1.5kVAC, 1minute
Working temperature ..... -20°C~70°C (refer to output derating curve)
Safety standards ..... UL60950-1, TUV EN60950-1 approved
EMC standards ..... EN55022 class B, EN61000-3-2,3,
EN61000-4-2,3,4,5,6,8,11, ENV50204
Connection ..... 3+8P /3.96mm pitch, JST: B3P/B8P-VH (PPS-125)
3+5Px2 /3.96mm pitch, JST: B3P/B5Px2-VH (PPT-125)
Packing ..... 0.37kg; 36pcs / 14.3kg / 0.79CUFT

❖ Single Output

Model No.	Output	Tol.	R&N	Effi.
PPS-125-3.3	3.3V, 0~25A	±2%	100mV	70%
PPS-125-5	5V, 0~25A	±2%	100mV	79%
PPS-125-12	12V, 0~10.5A	±2%	100mV	80%
PPS-125-13.5	13.5V, 0~9.3A	±2%	100mV	80%
PPS-125-15	15V, 0~8.4A	±2%	100mV	80%
PPS-125-24	24V, 0~5.2A	±1%	150mV	83%
PPS-125-27	27V, 0~4.6A	±1%	150mV	83%
PPS-125-48	48V, 0~2.6A	±1%	250mV	84%

❖ Triple Output

Model No.	Output	Tol.	R&N	Effi.	Max
PPT-125A	3.3V, 1.0~12.5A	±3%	100mV	75%	99W
	5V, 0.8~10.0A	±5%	100mV		
	12V, 0.05~0.63A	±6%	120mV		
PPT-125B	5V, 1.0~14.38A	±3%	100mV	78%	124W
	12V, 0.3~3.75A	±5%	120mV		
	-12V, 0.05~0.63A	±6%	120mV		
PPT-125C	5V, 1.0~13.75A	±3%	100mV	78%	125W
	15V, 0.25~3.13A	±5%	150mV		
	-15V, 0.05~0.63A	±6%	150mV		
PPT-125D	5V, 1.0~8.75A	±3%	100mV	78%	126W
	24V, 0.25~3.13A	±5%	240mV		
	12V, 0.05~0.63A	±6%	120mV		

150W Single Output with PFC Function

- Universal AC input / Full range
- PF>0.98@115VAC; >0.95@230VAC
- Protections: Short circuit / Over load / Over voltage / Over temp.
- Cooling by free air convection
- High power density 8.4W/in³
- No load power consumption<1W
- 100% full load burn-in test
- 3 years warranty

169x 60.7x 28.5 mm

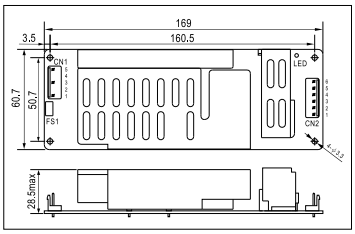

AC input voltage range .....90~264VAC ; 127~370VDC
DC adjustment range ..... Can be modified between ±10% rated output voltage by factory
Overload protection ..... 105%~135% hiccup mode, auto-recovery
Over voltage protection ..... 110%~135% rated output voltage
Withstand voltage ..... I/P-O/P: 4.25kVDC, I/P-FG:1.5kVAC, 1minute
Working temperature ..... 0~40°C@100%, -20°C@80%, 60°C@60% load
Safety standards ..... UL60950-1 approved
EMC standards ..... EN55022 class B, EN61000-3-2,3, EN61000-4-2,3,4,5,6,8,11, ENV50204
Connection ..... 5+6P / 3.96mm pitch, JST P/N :B5P / B6P-VH
Packing ..... 0.32kg ; 48pcs / 15.8kg / 0.79CUFT

Model No.	Output	Tol.	R&N	Effi.
ASP-150-12	12V, 0~11A	±2%	150mV	88%
ASP-150-15	15V, 0~9.5A	±2%	180mV	88%
ASP-150-20	20V, 0~7.5A	±1%	200mV	90%
ASP-150-24	24V, 0~6.3A	±1%	240mV	90%
ASP-150-48	48V, 0~3.2A	±1%	240mV	89%

200W Single Output with PFC Function

- Universal AC input / Full range
- High efficiency up to 90%
- PF>0.98@115VAC; >0.94@230VAC
- Protections: Short circuit / Over load / Over voltage / Over temp.
- High power density 9.78W/inch³
- 5"x3" compact size
- ZVS technology to reduce power dissipation
- Built-in remote sense function
- Free air convection for 150W and 200W with 20.5 CFM forced air
- 3 years warranty

127x 76.2x 34.6 mm

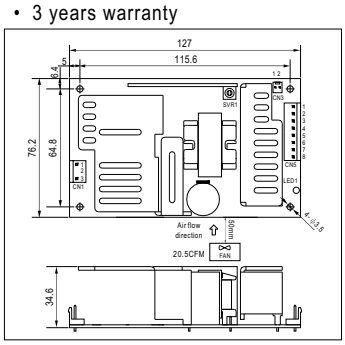

AC input voltage range ..... 90~264VAC; 127~370VDC
DC adjustment range ..... ±10% rated output voltage
Overload protection ..... 105~135% hiccup mode, auto-recovery
Over voltage protection ..... 115%~135% rated output voltage
Withstand voltage ..... I/P-O/P: 3kVAC, I/P-FG:1.5kVAC, 1minute
Working temperature ..... -20°C~70°C (refer to output derating curve)
Safety standards ..... UL60950-1, TUV EN60950-1 approved
EMC standards ..... EN55022 class B, EN61000-3-2,3 EN61000-4-2,3,4,5,6,8,11, ENV50204
Connection ..... 3+8P / 3.96mm pitch, JST B3P / B8P-VH
Packing ..... 0.37kg ; 36pcs / 14.3kg / 0.79CUFT

Model No.	Output	Tol.	R&N	Effi.
PPS-200-5	5V, 0~36.0A	±4%	100mV	86%
PPS-200-12	12V, 0~16.6A	±3%	100mV	89%
PPS-200-15	15V, 0~13.3A	±3%	100mV	89%
PPS-200-24	24V, 0~8.30A	±2%	150mV	89%
PPS-200-27	27V, 0~7.40A	±2%	150mV	89%
PPS-200-48	48V, 0~4.167A	±2%	250mV	90%

250W Isolated Dual Output with PFC Function

- Universal AC input / Full range
- Isolated output & GND for CH1,CH2
- PF>0.97@115VAC; >0.92@230VAC
- Protections: Short circuit / Overload / Over voltage / Over temp.
- Optional case available
- Cooling by free air convection
- Remote control function for CH1
- Peak load 170% for 10 sec. (CH1)
- 100% full load burn-in test
- 3 years warranty

222x 95x 40 mm

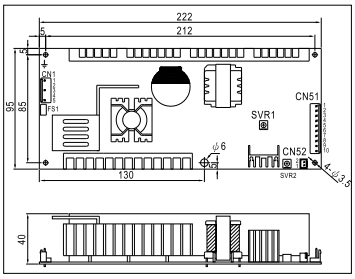

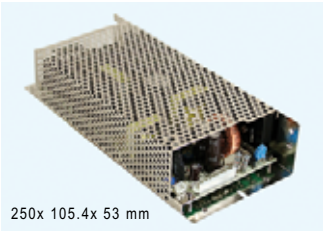
250x 105.4x 53 mm

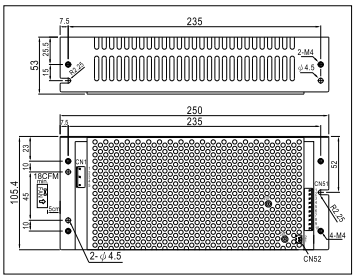

AC input voltage range ..... 90~264VAC; 127~370VDC
AC inrush current ..... Cold start, 55A at 230VAC
Leakage current ..... Less than 3.5mA at 240VAC
DC adjustment range ..... ±10% for CH1; ±5% for CH2
Overload protection(CH1) ..... 105%~170% normally operation, shut off after 10 sec.; >180%, constant current, shut off after 10 sec.
(CH2) ..... 101%~150% hiccup mode, auto-recovery
Over voltage protection ..... CH1: 115~140%, CH2: 110~135%
Setup, rise, hold up time ..... 1200ms, 60ms, 30ms at full load and 230VAC
Withstand voltage I/P-O/P:3.0kVAC, I/P-FG:1.5kVAC, 1minute
Working temperature ..... -20°C~+70°C (refer to output derating curve)
Safety standards ..... UL60950-1, TUV EN60950-1 approved
EMC standards ..... EN55022 class B, EN61000-3-2,-3 EN61000-4-2,3,4,5,6,8,11, ENV50204
Connection ..... 5+10+2P/3.96mm pitch JST B5P/B10P-VH, B2B-XH
Packing ..... 0.74Kg ; 18pcs / 14.3Kg / 0.88CUFT

Model No.	Output	Tol.	R&N	Effi.
PID-250A	12V, 0~15A	±3%	120mV	84%
	5V, 0~5.0A	±2%	50mV	
PID-250B	24V, 0~9.4A	±2%	150mV	86%
	5V, 0~5.0A	±2%	50mV	
PID-250C	36V, 0~6.3A	±2%	200mV	86%
	5V, 0~5.0A	±2%	50mV	
PID-250D	48V, 0~4.7A	±2%	200mV	86%
	5V, 0~5.0A	±2%	50mV	

Feature Description

PID-250 series is suitable for motor-based equipment with logic control circuit. CH1 with high peak power capability can provide the required surge loading while starting up the motor. The isolated 5V/5A CH2 is good for logic control usage and can still work properly even CH1 is malfunction or at any protection modes. The isolated design between CH1 and CH2 can significantly prevent noise of the motor action from entering control circuits and hence secure the accurate operation of the end equipment.

LPS/LPP Series

50~150W Single Output

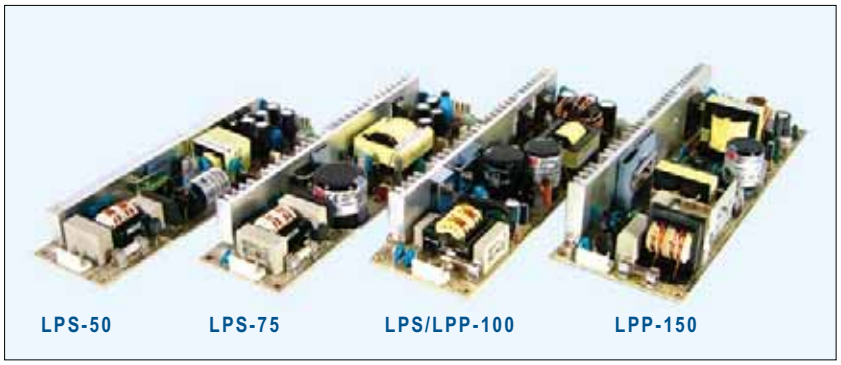

Features

- Universal AC input / Full range
- Built-in active PFC function (LPP-100/150)
- Protections: Short circuit / Overload / Over voltage
- Optional over temperature protection for LPP-150
- Built-in remote ON/OFF control (LPS-50/75)
- Cooling by free air convection
- 100% full load burn-in test
- 2 years warranty for LPS series
  3 years warranty for LPP series

LPS-50	LPS-75	LPS/LPP-100	LPP-150
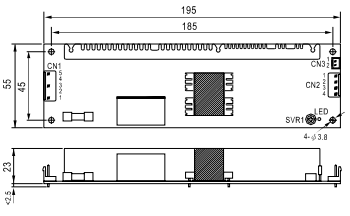	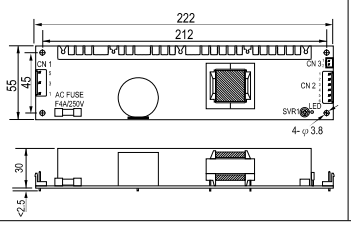	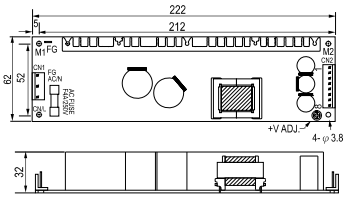	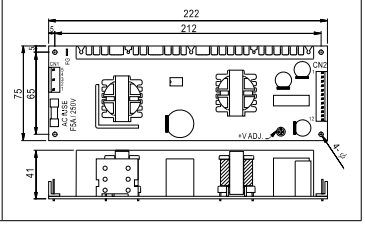

General Specification (Please refer to www.meanwell.com for detail spec.)

Model No.		LPS-50	LPS-75	LPS-100	LPP-100	LPP-150
AC input voltage range		90~264VAC		115/230 auto switch	85~264VAC	
AC inrush current (230VAC)		35A	36A	60A	30A	40A
DC adjustment range		±10% rated output voltage			-5~+10% rated output voltage	
Overload protection	Range	122%~160%	115%~150%	105%~140%	105%~150% rated output power	
	Type	Hiccup mode, auto recovery			Constant current limiting, auto recovery	
Over voltage protection	Range	110%~135% of rated output voltage				
	Type	Hiccup mode, auto recovery			Shut off, AC recycle to re-start	
Withstand voltage		I/P-O/P: 3kVAC, I/P-FG:1.5kVAC, O/P-FG: 0.5kVAC, 1 minute				
Working temperature		-20~+70°C (refer to output derating curve)		-10~+60°C (refer to output derating curve)		
Safety standards		UL60950-1, TUV EN60950-1 approved				
EMC standards		EN55022 class B, EN61000-3-2,3, ENV50204, EN61000-4-2,3,4,5,6,8,11 (EN61000-6-2 heavy industry level for LPS-50/75 only)				
Connection		JST B5P / B4P-VH	JST B5P / B6P-VH	5P+8P/3.96mm pitch, JST B5P / B8P-VH		JST B5P / B6Px2-VH
Dimension (L*W*H)(mm)		195x 55x 23	222x 55x 30	222x 62x 32		222x 75x 41
Packing		48pcs / 12.5kg	48pcs / 15.6kg	24pcs / 12.5kg	24pcs / 13.9kg	24pcs / 16.6kg

50W — LPS-50

Model No.	Output	Tol.	R&N	Effi.
LPS-50-3.3	3.3V, 0~10A	±3%	50mV	75%
LPS-50-5	5V, 0~10A	±3%	50mV	81%
LPS-50-12	12V, 0~4.2A	±2%	80mV	82%
LPS-50-15	15V, 0~3.4A	±2%	80mV	84%
LPS-50-24	24V, 0~2.1A	±1%	80mV	85%
LPS-50-48	48V, 0~1.1A	±1%	100mV	86%

75W — LPS-75

Model No.	Output	Tol.	R&N	Effi.
LPS-75-3.3	3.3V, 0~15A	±3%	80mV	69%
LPS-75-5	5V, 0~15A	±3%	80mV	77%
LPS-75-12	12V, 0~6.2A	±2%	100mV	80%
LPS-75-15	15V, 0~5.0A	±2%	100mV	81%
LPS-75-24	24V, 0~3.2A	±2%	120mV	83%
LPS-75-48	48V, 0~1.56A	±2%	120mV	83%

100W — LPS-100

Model No.	Output	Tol.	R&N	Effi.
LPS-100-3.3	3.3V, 0~20A	±3%	150mV	69%
LPS-100-5	5V, 0~20A	±3%	100mV	77%
LPS-100-7.5	7.5V, 0~13.3A	±2%	100mV	77%
LPS-100-12	12V, 0~8.4A	±2%	100mV	79%
LPS-100-13.5	13.5V, 0~7.5A	±2%	100mV	79%
LPS-100-15	15V, 0~6.7A	±2%	100mV	80%
LPS-100-24	24V, 0~4.2A	±1%	150mV	80%
LPS-100-27	27V, 0~3.8A	±1%	150mV	81%
LPS-100-48	48V, 0~2.1A	±1%	200mV	81%

100W (with PFC Function) — LPP-100

Model No.	Output	Tol.	R&N	Effi.
LPP-100-3.3	3.3V, 0~20A	±2%	100mV	69%
LPP-100-5	5V, 0~20A	±2%	100mV	75%
LPP-100-7.5	7.5V, 0~13.5A	±2%	100mV	76%
LPP-100-12	12V, 0~8.5A	±2%	100mV	79%
LPP-100-13.5	13.5V, 0~7.5A	±2%	100mV	79%
LPP-100-15	15V, 0~6.7A	±2%	100mV	80%
LPP-100-24	24V, 0~4.2A	±1%	150mV	83%
LPP-100-27	27V, 0~3.8A	±1%	150mV	83%
LPP-100-48	48V, 0~2.1A	±1%	250mV	83%

150W (with PFC Function) — LPP-150

Model No.	Output	Tol.	R&N	Effi.
LPP-150-3.3	3.3V, 0~30A	±2%	150mV	66%
LPP-150-5	5V, 0~30A	±2%	100mV	72%
LPP-150-7.5	7.5V, 0~20A	±2%	100mV	76%
LPP-150-12	12V, 0~12.5A	±2%	100mV	79%
LPP-150-13.5	13.5V, 0~11.2A	±2%	100mV	80%
LPP-150-15	15V, 0~10A	±2%	100mV	80%
LPP-150-24	24V, 0~6.3A	±1%	150mV	83%
LPP-150-27	27V, 0~5.6A	±1%	150mV	83%
LPP-150-48	48V, 0~3.2A	±1%	250mV	83%

Charger

120W Single Output Power Supply or Battery Charger

PCB Type: 144x 90x 35 mm
External Case Type: 180x 96x 49 mm

P.C.B. Dimension

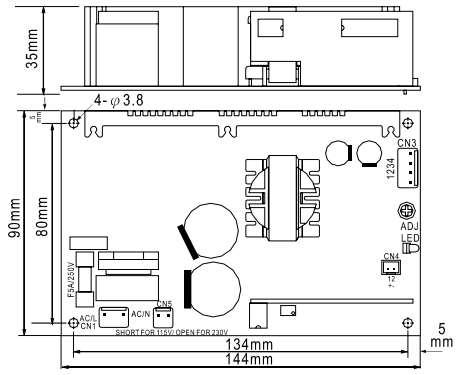

Case Drawing

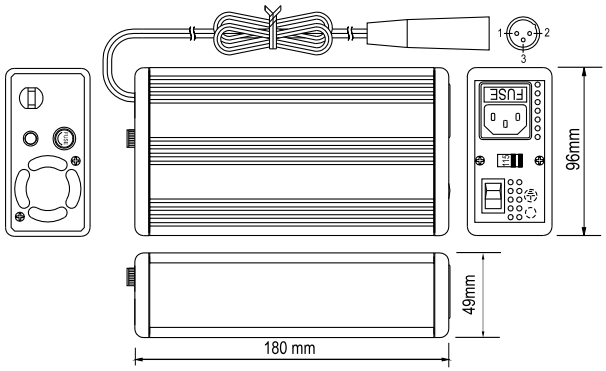

Features

- AC input range selectable by switch
- Passive PFC, PF> 0.65(option)
- Protection for deeply discharged battery
- Protections: Short circuit / Overload / Over voltage / Over temp.
- Charger for lead-acid batteries
- Built-in ON/OFF power switch
- 3 poles AC inlet with fuse holder
- Charging type can be selected (option)
- 2 color LED loading indicator
- EN60335 approved
- Low cost, high reliability
- Open frame models available (without safety approval)
- 2 years warranty

General Specification

AC input voltage range ..... 88~132VAC/ 176~264VAC selectable by switch
AC inrush current (max.) .... Cold start, 30A at 115VAC, 60A at 230VAC
Overload protection ..... 90~110% constant current limiting ,auto-recovery (PS-120: 105~150% hiccup mode, auto recovery)
Over voltage protection ..... 108~127% rated output voltage
Setup, rise, hold up time .... 1000ms, 50ms, 16ms at full load and 230VAC
Withstand voltage ..... I/P-O/P: 3kVAC, I/P-FG: 1.5kVAC, O/P-FG: 0.5kVAC, 1 minute
Working temperature ..... -10°C~45°C, derating curve may vary for different models (PS-120: -10~60°C)
Safety standards ..... UL60950-1, TUV EN60950-1, EN60335, EN60335-1, EN60335-2-29 approved
EMC standards ..... EN55022 class B, EN61000-4-2,3,4,5,6,8,11, EN61000-3-2,3, ENV50204
DC output cable ..... 6 ft. of SPT-2, 18AWGx2C
Standard output connector ... MIC 3P, male type(standard type)
Packing ..... 1.1kg ; 16pcs / 17.9kg / 1.47CUFT (without PFC)
1.24kg ; 16pcs / 20.1kg / 1.47CUFT (with PFC)

Model No.	Output	Tol.	R&N	Effi.
P□-120□-13□	13.8V, 0~7.2A	±3~±8.5%	150mV	70%
P□-120□-27□	27.6V, 0~4.3A	±1~±8.0%	200mV	76%
P□-120□-54□	55.2V, 0~2.2A	±1~±7.5%	250mV	78%

Charging Curve

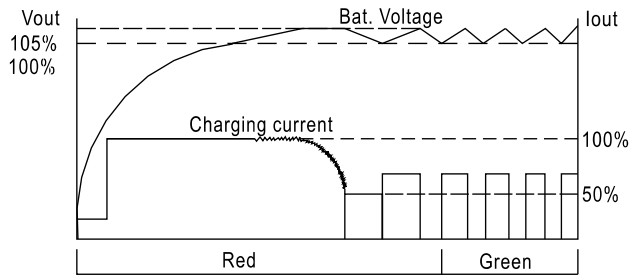

Type A: pulse charger (detect on bat. voltage)

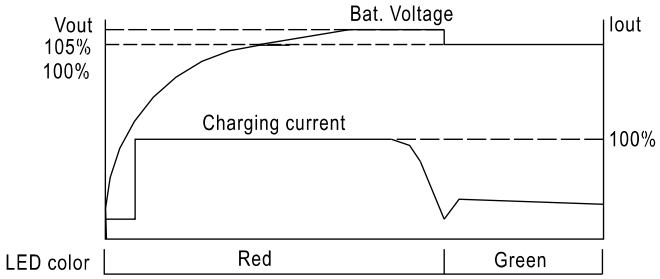

Type B: 2 section voltage charger (detect on charging current)

Order Information

P A - 120 P - 13 C

S: Power supply
A: Pulse charge
B: 2 section voltage charge

P: With PFC
N: None PFC

P : Open P.C.B.
C : With case

13: 13.8V
27: 27.6V
54: 55.2V

230W Single Output Battery Charger

UL / TUV / CE pending

190x 96x 49 mm

- 3 stage charging
- Universal AC input / Full range
- Built-in active PFC function, PF>0.95
- Protections: Short circuit / Overload / Over voltage / Over temperature
- 2 color LED loading indicator
- Built-in remote ON-OFF control
- Fan ON/OFF control
- Low cost, high realiability
- 3 years warranty

AC input voltage range ..... 90~264VAC; 127~370VDC
AC inrush current (max.) .. Cold start, 50A at 230VAC
Over voltage protection .... 102%~125% shut off, re-power on to recover
Withstand voltage ..... I/P-O/P: 3kVAC, I/P-FG: 1.5kVAC, O/P-FG:0.5kVAC
Working temperature ..... -20°C~+60°C (refer to output derating curve)
Safety standards ..... Design refer to UL1012, EN60335-2-29 (except for 48V), EN60950-1 (48V only)
EMC standards .....EN55022 class B, EN61000-4-2,3,4,5,6,8,11, EN61000-3-2,3, ENV50204

Model No.	Output	Effi.
PB-230-12	14.4V, 0~16A	85%
PB-230-24	28.8V, 0~8A	86%
PB-230-48	57.6V, 0~4A	87%

300W Single Output Battery Charger

CB (except for 48V) CE (P type only)

CASE: 801B 253x 135x 48.5 mm

- Optimal 3 stage charging characteristic
- AC input range selectable by switch
- Passive PFC compliance to EN61000-3-2 class A (option)
- Protections: Reverse polarity / Short circuit / Over voltage / Over temperature
- Charger for lead-acid batteries
- Built-in ON/OFF power switch
- 3 poles AC inlet (IEC 320-C14)
- 2 color LED loading indicator
- Built-in remote ON/OFF control
- Cooling by free air convection
- 2 years warranty

AC input voltage range ..... 90~132VAC / 180~264VAC selectable by switch
AC inrush current (max.) .. Cold start, 60A at 230VAC
Over voltage protection .....108%~125% rated output voltage
Withstand voltage ..... I/P-O/P: 3kVAC, I/P-FG: 1.5kVAC, 1 minute
Working temperature ..... -10°C~+50°C (refer to output derating curve)
Safety standards ..... IEC60335-2-29 CB approval by TUV (except for 48V), UL60950-1 approved
EMC standards ..... EN55022 class B, EN61000-4-2,3,4,5,6,8,11, EN61000-3-2,3 (P type), ENV50204
Packing .....1.45kg ; 6pcs / 9.7kg / 0.95CUFT

Model No.	Output (20 min.) /	(Continuous at 25°C)	Effi.
PB-300□-12	14.4V, 20.85A /	12.5A	85%
PB-300□-24	28.8V, 10.50A /	6.25A	86%
PB-300□-48	57.6V, 5.3A /	3.20A	88%

□ = P: with PFC; N: non PFC

360W Single Output Battery Charger

CB (except for 48V) CE (P type only)

CASE: 801A 253x 135x 48.5 mm

- Optimal 3 stage charging characteristic
- AC input range selectable by switch
- Passive PFC compliance to EN61000-3-2 class A (option)
- Protections: Reverse polarity / Short circuit / Over voltage / Over temperature
- Charger for lead-acid batteries
- Built-in ON/OFF power switch
- 3 poles AC inlet (IEC 320-C14)
- 2 color LED loading indicator
- Built-in remote ON/OFF control
- Cooling by built-in DC fan
- 2 years warranty

AC input voltage range ..... 90~132VAC / 180~264VAC selectable by switch
AC inrush current (max.) .. Cold start, 60A at 230VAC
Over voltage protection .... 108~125% rated output voltage
Withstand voltage ..... I/P-O/P: 3kVAC, I/P-FG: 1.5kVAC, 1 minute
Working temperature ..... -20°C~+60°C (refer to output derating curve)
Safety standards ..... IEC60335-2-29 CB approval by TUV (except for 48V), UL60950-1 approved
EMC standards ..... EN55022 class B, EN61000-4-2,3,4,5,6,8,11, EN61000-3-2,3 (P type), ENV50204
Packing ..... 1.5kg ; 6pcs / 10kg / 0.95CUFT

Model No.	Output	Effi.
PB-360□-12	14.4V, 24.3A	85%
PB-360□-24	28.8V, 12.5A	86%
PB-360□-48	57.6V, 6.25A	87%

□ = P: with PFC; N: non PFC

600W Single Output Battery Charger

(except for 48V)

CASE: 805C 230x 158x 67 mm

- 2/8 stage smart charger for lead-acid batteries
- Microprocessor controlled power management
- Universal AC input / Full range
- Built-in active PFC function, PF>0.95
- Protections: Reverse polarity / Short circuit / Over voltage / Over temperature
- Built-in temp. compensation function
- Status signal sent by relay contacts
- 3 color LED loading indicator
- Built-in remote ON-OFF control
- Fan speed control (depend on charging current)
- Charging curve can be modified for different battery applications (optional)
- 3 years warranty

AC input voltage range ..... 90~264VAC; 127~370VDC
AC inrush current (max.) .. Cold start, 50A at 230VAC
Over voltage protection .... 112%~125% shut off, re-power on to recover
Withstand voltage ..... I/P-O/P: 3kVAC, I/P-FG: 1.5kVAC, O/P-FG: 0.5kVAC
Working temperature ..... -20°C~+60°C (refer to output derating curve)
Safety standards ..... TUV EN60355-1, EN60335-2-29(except for 48V), UL1012 approved
EMC standards .....EN55022 class B conducted, EN61000-4-2,3,4,5,6,8,11, EN61000-3-2,3, ENV50204
Connection ..... IEC inlet for input; copper pillars for output

Model No.	Output	Effi.
PB-600-12	14.4V, 0~40.0A	86%
PB-600-24	28.8V, 0~21.0A	87%
PB-600-48	57.6V, 0~10.5A	89%

1000W Single Output Battery Charger

CASE: 804B 300x 184x 70 mm

- 2/8 stage smart charger for lead-acid batteries
- Microprocessor controlled power management
- Universal AC input / Full range
- Built-in active PFC function PF>0.95
- Protections: Reverse polarity / Short circuit / Over voltage / Over temperature
- Built-in temp. compensation function
- Can be connected to 2 battery banks
- Status signal sent by relay contacts
- 3 color LED loading indicator
- Built-in remote ON-OFF control
- Fan speed control
- Charging curve can be modified for different battery applications (optional)
- 3 years warranty

AC input voltage range ..... 90~264VAC / 127~370VDC
AC inrush current (max.) .... Cold start, 50A at 230VAC
Over voltage protection ..... 110%~125% shut off, re-power on to recover
Withstand voltage ..... I/P-O/P: 3kVAC, I/P-FG: 1.5kVAC, 1 minute
Working temperature ..... -20°C~+60°C (refer to output derating curve)
Safety standards ..... UL60950-1, TUV EN60950-1 approved
EMC standards ..... EN55022 class B conducted, ENV50204, EN61000-4-2,3,4,5,6,8,11, EN61000-3-2,3
Connection ..... IEC inlet for input; copper pillars for output
Packing ..... 3.5kg ; 4pcs / 15kg / 1.83CUFT

Model No.	Output	Effi.
PB-1000-12	14.4V, 60.0A	85%
PB-1000-24	28.8V, 34.7A	88%
PB-1000-48	57.6V, 17.4A	89%

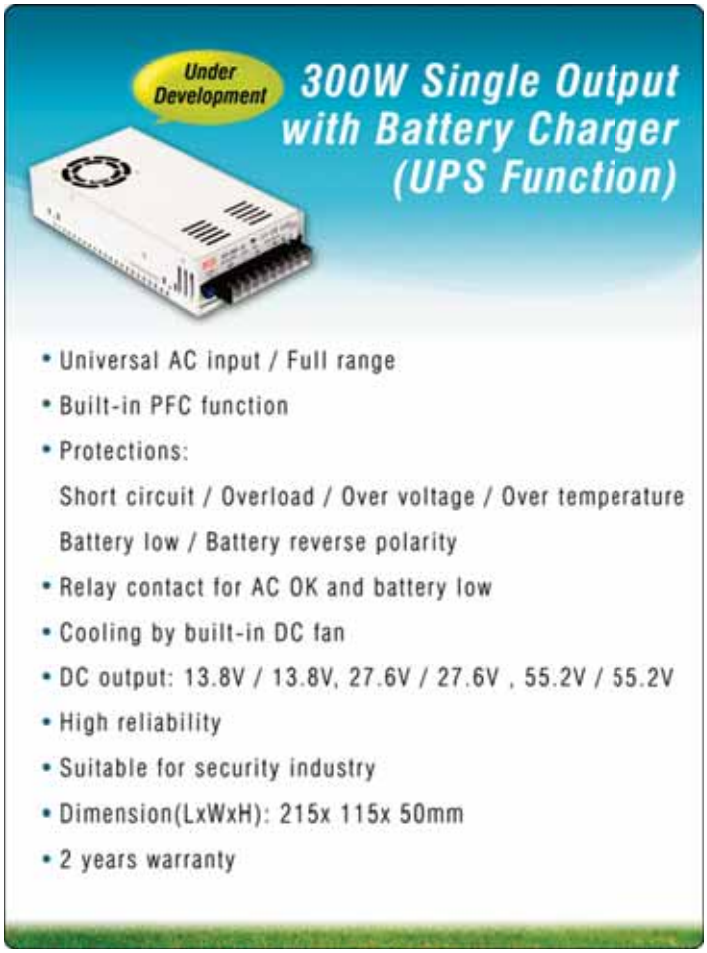

108W Desktop Power Supply or Charger

CASE: 909 150x 140x 75 mm

- AC input range selectable by switch
- Protections: Short circuit / Overload / Over voltage / Over temp.
- 3 color LED loading indicator
- Battery under / over voltage and polarity protection (ESC only)
- Cooling by free air convection
- Fixed switching frequency at 25kHz
- 2 years warranty

AC input voltage range ..... 88~132VAC / 176~264VAC selectable by switch
AC inrush current ..... Cold start, 40A at 230VAC
DC adjustment range ..... 13.5V: 12~15V, 27V: 24~30V, 54V: 48~56V
Overload protection ..... 105%~135% fold back current limiting, auto-recovery
Over voltage protection ..... 115%~135% rated output voltage
Setup, rise, hold up time ... 200ms, 100ms, 36ms at full load and 230VAC
Withstand voltage ..... I/P-O/P: 3kVAC, I/P-FG:1.5kVAC, 1minute
Working temperature ..... 0~35°C@100%, -10°C@80%, 60°C@60% load
Safety standards ..... CSA 61010-1 approved
EMC standards ..... EN55022 class B, EN61000-3-2,3 EN61000-4-2,3,4, ENV50204
Packing ..... 1.38kg ; 8pcs / 12.0kg / 1.1CUFT

Model No.	Output	Tol.	R&N	Effi.
ESC-120-13.5	13.5V, 0~8A	±2%	120mV	81%
ESC-120-27	27V, 0~4A	±1%	150mV	83%
ESC-120-54	54V, 0~2A	±1%	400mV	84%
ESP-120-13.5	13.5V, 0~8A	±2%	120mV	81%
ESP-120-27	27V, 0~4A	±1%	150mV	83%
ESP-120-54	54V, 0~2A	±1%	400mV	84%

216W Desktop Power Supply or Charger

CASE: 909 150x 140x 75 mm

- AC input range selectable by switch
- Protections: Short circuit / Overload / Over voltage / Over temp.
- 3 color LED loading indicator
- Battery under / over voltage and polarity protection (ESC only)
- Built-in DC fan with fan ON/OFF auto control at 50°C
- Fixed switching frequency at 25kHz
- 2 years warranty

AC input voltage range ..... 88~132VAC / 176~264VAC selectable by switch
AC inrush current ..... Cold start, 40A at 230VAC
DC adjustment range ..... 13.5V: 12~15V, 27V: 24~30V, 54V: 48~56V
Overload protection ..... 105%~135% fold back current limiting, auto-recovery
Over voltage protection .... 115%~135% rated output voltage
Setup, rise, hold up time ... 200ms, 100ms, 30ms at full load and 230VAC
Withstand voltage ..... I/P-O/P: 3kVAC, I/P-FG:1.5kVAC, 1minute
Working temperature ..... 0~40°C@100%, -10°C@80%, 60°C@60% load
Safety standards ..... CSA 61010-1 approved
EMC standards ..... EN55022 class B, EN61000-3-2,3 EN61000-4-2,3,4, ENV50204
Packing ..... 1.5kg ; 8pcs / 13.0kg / 1.1CUFT

Model No.	Output	Tol.	R&N	Effi.
ESC-240-13.5	13.5V, 0~16A	±2%	120mV	81%
ESC-240-27	27V, 0~8A	±1%	150mV	84%
ESC-240-54	54V, 0~4A	±1%	400mV	85%
ESP-240-13.5	13.5V, 0~16A	±2%	120mV	81%
ESP-240-27	27V, 0~8A	±1%	150mV	84%
ESP-240-54	54V, 0~4A	±1%	400mV	85%

30W Power Adaptor with Charging Function

- Universal AC input/ Full range
- Class II power (without earth pin)
- No load power consumption < 1W
- Constant current and voltage (CC, CV mode)
- High reliability
- Suitable for high surge current equipment
- Protections: Short circuit / Overload / Over voltage / Over temp.
- 2 color LED indicator for charging status
- Fully enclosed plastic case
- 2 years warranty

AC input voltage range ..... 90~264VAC; 127~370VDC
Overload protection ..... 90~110% constant current mode and over 300% pulsing mode
Over voltage protection ..... 110%~135% rated output voltage, clamp by Zener diode
Withstand voltage ..... I/P-O/P: 4242VDC, 1minute
Working temperature ..... 0~40°C @ 100% load, 50°C @ 70% load
Safety standards ..... UL60950-1, CSA 22.2, TUV EN60950-1
EMC standards EN55014-1, EN61000-3-2,3, EN61000-4-2,3,4,5,6,11
Length of output cable ..... 180cm of UL1185, 18AWG
Standard DC plug ..... P1J: 2.1øx5.5øx11mm / C+, tuning fork type

Order No.	Output	R&N	Effi.
GC30☐-0P1J	4.2V, 0~4.00A	50mV	55%
GC30☐-1P1J	5.6V, 0~3.99A	50mV	70%
GC30☐-11P1J	7.2V, 0~3.00A	80mV	74%
GC30☐-2P1J	8.4V, 0~3.00A	80mV	76%
GC30☐-4P1J	14.3V, 0~2.09A	100mV	78%
GC30☐-5P1J	16.8V, 0~1.60A	100mV	78%
GC30☐-6P1J	28.6V, 0~1.04A	150mV	80%

☐= B, U, E; B: IEC320-C8, U: US type plug, E: European type plug

120W Power Adaptor with Charging Function

UL / TUV / CB / CE / FCC pending

- Universal AC input/ Full range
- No load power consumption < 1W
- Built-in active PFC function, PF>0.95
- 3 pole AC inlet IEC320-C14
- Class I power (with earth pin)
- Protections: Short circuit / Overload / Over voltage / Over temp.
- Fully enclosed plastic case
- 2 color LED indicator for charging status
- 2 years warranty

AC input voltage range ..... 85~264VAC; 120~370VDC
Overload protection ..... 105%~135% constant current, auto-recovery
Over voltage protection ..... 105%~135% rated output voltage, re-power on to recover
Withstand voltage ..... I/P-O/P: 3kVAC
Working temperature ..... -30~+70°C (refer to derating curve)
Safety standards ..... Design refer to UL1012, EN60335-2-29 (except for 48V), EN60950-1 (48V only)
EMC standards ..... EN55022 class B, FCC part 15 class B, EN61000-3-2,3, EN61000-4-2,3,4,5,6,8,11
Length of output cable ..... 120cm of UL2464, 16AWGx 4C
Standard DC plug ..... Power DIN 4P with lock type

Model No.	Output	Effi.
GC120A12-R7B	13.6V, 7.5A	89%
GC120A24-R7B	27.2V, 4.42A	90%
GC120A48-R7B	54.4V, 2.21A	91%

160W Power Adaptor with Charging Function

UL / TUV / CB / CE / FCC pending

- Universal AC input/ Full range
- No load power consumption < 1W
- Built-in active PFC function, PF>0.95
- 3 pole AC inlet IEC320-C14
- Class I power (with earth pin)
- Protections: Short circuit / Overload / Over voltage / Over temp.
- Fully enclosed plastic case
- 2 color LED indicator for charging status
- 2 years warranty

AC input voltage range ..... 85~264VAC; 120~370VDC
Overload protection ..... 105%~135% constant current, auto-recovery
Over voltage protection ..... 105%~135% rated output voltage, re-power on to recover
Withstand voltage ..... I/P-O/P: 3kVAC
Working temperature ..... -30~+70°C (refer to derating curve)
Safety standards ..... Design refer to UL1012, EN60335-2-29 (except for 48V), EN60950-1 (48V only)
EMC standards ..... EN55022 class B, FCC part 15 class B, EN61000-3-2,3, EN61000-4-2,3,4,5,6,8,11
Length of output cable ..... 120cm of UL2464, 16AWGx 4C
Standard DC plug ..... Power DIN 4P with lock type

Model No.	Output	Effi.
GC160A12-R7B	13.6V, 10.0A	89%
GC160A24-R7B	27.2V, 5.89A	91%
GC160A48-R7B	54.4V, 2.95A	93%

218W Power Adaptor with Charging Function

- Universal AC input/ Full range
- No load power consumption < 1W
- Built-in active PFC function, PF>0.91
- 3 pole AC inlet IEC320-C14
- Class I power (with earth pin)
- Protections: Short circuit / Overload / Over voltage / Over temp.
- Fully enclosed plastic case
- 2 color LED indicator for charging status
- 2 years warranty

AC input voltage range ..... 90~264VAC; 127~370VDC
Overload protection ..... 90%~110% constant current, auto-recovery after fault condition is removed
Over voltage protection ..... 105~135% rated output voltage, re-power on to recover
Withstand voltage ..... I/P-O/P: 3kVAC
Working temperature ..... -10~60°C (refer to derating curve)
Safety standards ..... TUV EN60950-1, UL1012 approved
EMC standards ..... EN55022 class B, FCC part 15 class B, EN61000-3-2,3, EN61000-4-2,3,4,5,6,8,11
Length of output cable ..... 100cm of UL2464, 16AWGx 4C
Standard DC plug ..... Power DIN 4P with lock type

Model No.	Output	Effi.
GC220A12-R7B	13.6V, 13.5A	89.0%
GC220A24-R7B	27.2V, 8A	92.5%
GC220A48-R7B	54.4V, 4A	93.0%

To Satisfy our customers is our goal —
- High Quality
- Low Cost
- Prompt Delivery
- Best Service

6W Green Power Adaptor

- Universal AC input/ Full range
- No load power consumption < 0.3W
- Meet ENERGY STAR level V (CEC)
- Meet EISA 2007 (Energy Independence and Security Act)
- 2 pole US / European type plug
- Class II power (without earth pin)
- Full output 5~48V safety approved
- Protections: Short circuit / Overload / Over voltage
- Pass LPS
- Fully enclosed plastic case
- 2 years warranty

GS06U
32x 66x 42.5 mm

GS06E
32x 66x 42.5 mm

AC input voltage range .... 90~264VAC
AC inrush current(max.) .. Cold start, <30A peak at 115VAC or <50A peak at 230VAC
Overload protection ..... Hiccup mode, auto-recovery
Over voltage protection ... Clamp by zener diode > 120%
Withstand voltage ..... I/P-O/P: 4242VDC, 1minute
Working temperature ..... 0~40°C @ 100% load, 50°C @ 70% load
Safety standards ..... UL60950-1, CSA 22.2, TUV EN60950-1
EMC standards EN55022-B, EN61000-3-2,3, EN61000-4-2,3,4,5,6,11
Length of output cable ..... 180cm of UL1185, 20AWG

Model No.	Output	Tol.	R&N	Effi.
GS06☐-1P1J	5V, 0~1.00A	±5%	50mV	67%
GS06☐-11P1J	7.5V, 0~0.80A	±5%	80mV	72%
GS06☐-2P1J	9V, 0~0.66A	±5%	80mV	74%
GS06☐-3P1J	12V, 0~0.50A	±3%	100mV	76%
GS06☐-4P1J	15V, 0~0.40A	±3%	120mV	77%
GS06☐-5P1J	18V, 0~0.33A	±3%	150mV	78%
GS06☐-6P1J	24V, 0~0.25A	±2%	180mV	80%
GS06☐-8P1J	48V, 0~0.125A	±2%	200mV	82%

☐ = U: American 2P ; E: European 2P

12W Green Power Adaptor

- Universal AC input/ Full range
- No load power consumption < 0.3W
- Pass ENERGY STAR level IV(CEC)
- Meet EISA 2007 (Energy Independence and Safety Act)
- 2 pole US / European type plug
- Class II power (without earth pin)
- Full output 5~24V safety approved
- Protections: Short circuit / Overload / Over voltage / Over temp.
- Pass LPS
- Fully enclosed plastic case
- 2 years warranty

GS12U
65x 47x 26.5 mm

GS12E
65x 47x 26.5 mm

AC input voltage range .... 90~264VAC
AC inrush current(max.) .. Cold start, <25A peak at 115VAC or 45A peak at 230VAC
Overload protection ..... Hiccup mode, auto-recovery
Over voltage protection ... 115%~135% clamp by zener diode
Withstand voltage ..... I/P-O/P: 3KVAC, 1minute
Working temperature ..... 0~40°C @ 100% load, 50°C @ 70% load
Safety standards ..... UL60950-1, CSA 22.2, TUV EN60950-1, CNS14336
EMC standards ..... EN55022-B, EN61204-3, EN61000-3-2,3, EN61000-4-2,3,4,5,6,8,11, FCC part15 class B, CNS13438

Model No.	Output	Tol.	R&N	Effi.
GS12☐05-P1I	5V, 0~2.00A	±5%	75mV	72%
GS12☐07-P1I	7.5V, 0~1.60A	±4%	90mV	75%
GS12☐09-P1I	9V, 0~1.33A	±4%	90mV	76%
GS12☐12-P1I	12V, 0~1.00A	±3%	120mV	77%
GS12☐15-P1I	15V, 0~0.80A	±3%	150mV	79%
GS12☐18-P1I	18V, 0~0.67A	±3%	180mV	80%
GS12☐24-P1I	24V, 0~0.50A	±3%	200mV	80%

☐ = U: American 2P ; E: European 2P

15W Green Power Adaptor

- Universal AC input/ Full range
- No load power consumption < 0.3W
- Meet ENERGY STAR level V (CEC) for 5~48V
- Meet EISA 2007 (Energy Independence and Security Act) for 5~48V
- Full output 3~48V safety approved
- Protections: Short circuit / Overload / Over voltage
- Pass LPS
- Fully enclosed plastic case
- 2 years warranty

▲ GS15A
100x 58.5x 32.8 mm

▲ GS15B
100x 58.5x 32.8 mm

▲ GS15U
34x 71x 50 mm

▲ GS15E
34x 71x 50 mm

AC input voltage range ..... 90~264VAC
AC inrush current(max.) .... Cold start, <30A peak at 115VAC or <50A peak at 230VAC
Overload protection ..... Hiccup mode, auto-recovery
Over voltage protection ..... Clamp by zener diode > 120%
Withstand voltage ..... I/P-O/P: 3kVAC, I/P-FG: 1.5kVAC, 1 minute
Working temperature ..... 0~40°C @ 100% load, 50°C @ 70% load
Safety standards ..... UL60950-1, CSA 22.2, TUV EN60950-1 approved
EMC standards EN55022-B, EN61000-3-2,3, EN61000-4-2,3,4,5,6,11
Length of output cable ..... 180cm of UL1185, 18AWG (150cm length for 3.3V output)
Standard DC plug ..... P1J: 2.1øx5.5øx11mm / C+, tuning fork type (refer to page 64 for DC plug list)

Order No.	Output	Tol.	R&N	Effi.
GS15☐-0P1J	3.3V, 0~2.18A	±6%	50mV	55%
GS15☐-1P1J	5.0V, 0~2.40A	±5%	50mV	65%
GS15☐-11P1J	7.5V, 0~1.60A	±5%	80mV	72%
GS15☐-2P1J	9.0V, 0~1.66A	±5%	80mV	74%
GS15☐-3P1J	12V, 0~1.25A	±3%	80mV	76%
GS15☐-4P1J	15V, 0~1.00A	±3%	100mV	77%
GS15☐-5P1J	18V, 0~0.83A	±3%	120mV	78%
GS15☐-6P1J	24V, 0~0.62A	±2%	150mV	80%
GS15☐-8P1J	48V, 0~0.31A	±2%	240mV	81%

☐ = A:IEC320-C14 ; B: IEC320-C8
E: European 2P ; U: American 2P

▶▶ Special Models Suitable for High Surge Current

GS06 and GS15 also have models with "constant current limiting" instead of "hiccup type" as the overload protection which are suitable for peak load usage. Please refer to the overload curves that specify the output voltage / output current characteristics of these two overload protection types. If you are interested in the models with "constant current limiting" function, please contact with your sales representative for details!

Constant Current Limiting

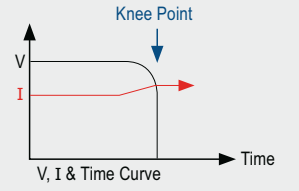

Hiccup mode current limiting

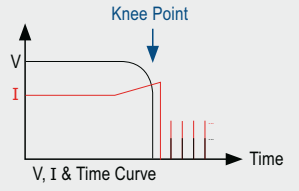

Adaptor

18~25W Single Output

▲ GS18/25A 93x 54x 36 mm

▲ GS18/25B 79x 54x 33 mm

▲ GS18/25U 79x 54x 33 mm

▲ GS18/25E 79x 54x 33 mm

Features

- Universal AC input / Full range
- No load power consumption < 0.5W
- Pass ENERGY STAR level IV (CEC)
- Meet EISA 2007 (Energy Independence and Security Act) for 5~48V
- 2 pole USA / EURO plug or IEC320-C14/C8
- Class I power (with earth pin) only for IEC320-C14
- Full output 5~48V safety approved
- Protections: Short circuit / Overload / Over voltage
- Fully enclosed plastic case
- LED indicator for power on
- Pass LPS
- Approvals:
  UL / CUL / TUV / BSMI / CB / FCC / CE for desktop type
  TUV / CB / CE for European type plug
  UL / CUL / BSMI / CB / FCC for US type plug
- 2 years warranty

General Specification (Please refer to www.meanwell.com for detail spec.)

AC input voltage range	90~264VAC / 0.5A for 18W; 90~264VAC / 0.7A for 25W
AC inrush current (max.)	Cold start, <25A peak at 115VAC; Cold start, <50A peak at 230VAC
Overload protection	Hiccup mode, auto-recovery
Over voltage protection	105~135% rated output voltage
Setup, rise, hold up time	500ms, 20ms, 50ms@ 230VAC input
Withstand voltage	I/P - O/P: 4242VDC, 1 minute
Working temperature	0~40°C @ 100% load, 50°C @ 70% load
Safety standards	UL60950-1, CSA 22.2, EN60950-1, BSMI CNS14336 approved
EMC standards	EN55022 class B, EN61000-3-2,3, EN61000-4-2,3,4,5,6,8,11, FCC part 15 class B
Length of output cable	180cm of UL1185, 18AWG or 120cm, 16AWG for 5V output
Standard DC plug	P1J: 2.1øx5.5øx11mm / C+, tuning fork type (refer to page 64 for DC plug list)

Desktop—18W

□=A/B

Order No.	Output	Tol.	R&N	Effi.
GS18□05-P1J	5V, 0~3.00A	±5%	50mV	73%
GS18□07-P1J	7.5V, 0~2.00A	±5%	80mV	79%
GS18□09-P1J	9V, 0~2.00A	±5%	80mV	79%
GS18□12-P1J	12V, 0~1.50A	±3%	80mV	81%
GS18□15-P1J	15V, 0~1.20A	±3%	100mV	81%
GS18□18-P1J	18V, 0~1.00A	±3%	150mV	82%
GS18□24-P1J	24V, 0~0.75A	±2%	180mV	84%
GS18□28-P1J	28V, 0~0.64A	±2%	240mV	84%
GS18□48-P1J	48V, 0~0.375A	±2%	240mV	85%

A: IEC 320-C14 / Class I, B: IEC 320-C8 / Class II

Desktop—25W

□=A/B

Order No.	Output	Tol.	R&N	Effi.
GS25□05-P1J	5V, 0~4.00A	±5%	50mV	74%
GS25□07-P1J	7.5V, 0~2.93A	±5%	80mV	78%
GS25□09-P1J	9V, 0~2.77A	±5%	80mV	79%
GS25□12-P1J	12V, 0~2.08A	±3%	80mV	81%
GS25□15-P1J	15V, 0~1.66A	±3%	100mV	82%
GS25□18-P1J	18V, 0~1.38A	±3%	150mV	82%
GS25□24-P1J	24V, 0~1.04A	±2%	180mV	83%
GS25□28-P1J	28V, 0~0.89A	±2%	240mV	83%
GS25□48-P1J	48V, 0~0.52A	±2%	240mV	84%

A: IEC 320-C14 / Class I, B: IEC 320-C8 / Class II

Wall-mounted—18W

□=U/E

Order No.	Output	Tol.	R&N	Effi.
GS18□05-P1J	5V, 0~3.00A	±5%	50mV	73%
GS18□07-P1J	7.5V, 0~2.00A	±5%	80mV	79%
GS18□09-P1J	9V, 0~2.00A	±5%	80mV	79%
GS18□12-P1J	12V, 0~1.50A	±3%	80mV	81%
GS18□15-P1J	15V, 0~1.20A	±3%	100mV	81%
GS18□18-P1J	18V, 0~1.00A	±3%	150mV	82%
GS18□24-P1J	24V, 0~0.75A	±2%	180mV	84%
GS18□28-P1J	28V, 0~0.64A	±2%	240mV	84%
GS18□48P1J	48V, 0~0.375A	±2%	240mV	85%

U: US type plug, E: European type plug

Wall-mounted—25W

□=U/E

Order No.	Output	Tol.	R&N	Effi.
GS25□05-P1J	5V, 0~4.00A	±5%	50mV	74%
GS25□07-P1J	7.5V, 0~2.93A	±5%	80mV	78%
GS25□09-P1J	9V, 0~2.77A	±5%	80mV	79%
GS25□12-P1J	12V, 0~2.08A	±3%	80mV	81%
GS25□15-P1J	15V, 0~1.66A	±3%	100mV	82%
GS25□18-P1J	18V, 0~1.38A	±3%	150mV	82%
GS25□24-P1J	24V, 0~1.04A	±2%	180mV	83%
GS25□28-P1J	28V, 0~0.89A	±2%	240mV	83%
GS25□48-P1J	48V, 0~0.52A	±2%	240mV	84%

U: US type plug, E: European type plug

Adaptor 12~24W Single Output and Interchangeable Wall-mounted Type

▲ GE12 70.7x 40x 38.8 mm ▲ GE18/24 81x 43x 40.5 mm

Features

- Interchangeable AC plugs (plug kit sold seperately)
- Universal AC input / Full range
- No load power consumption <0.3W
- Meet ENERGY STAR level V (CEC), except for 48V
- Meet EISA 2007 (Energy Independence and Security Act)
- Class II power (without earth pin)
- Protections: Short circuit / Over voltage / Overload
- Fully enclosed plastic case
- LED indicator for power on
- Pass LPS
- Approvals:
  UL / CUL / TUV / CCC / CB / FCC / CE / C-Tick for GE12
  UL / CUL / TUV / CB / FCC / CE / C-Tick for GE18/24
- 2 years warranty

General Specification (Please refer to www.meanwell.com for detail spec.)

AC input voltage range	90~264VAC / 0.4A for GE12; 90~264VAC / 0.7A for GE18/24
AC inrush current (max.)	Cold start, <40A peak at 100VAC; Cold start, <80A peak at 230VAC
Overload protection	Hiccup mode, auto-recovery
Over voltage protection	105~135% rated output voltage
Setup, rise, hold up time	4000ms, 100ms, 30ms at 230VAC input
Withstand voltage	I/P-O/P:4242VDC, 1 minute
Working temperature	0~30°C @ 100% load, 40°C @ 75% load, 50°C @ 50% load
Safety standards	UL60950-1, CSA22.2, EN60950-1 approved
EMC standards	EN55022 class B, EN61000-3-2,3, EN61000-4-2,3,4,5,6,8,11, FCC part15 class B
Length of output cable	150cm of UL2468, 20AWG for GE12; 150cm of UL2468, 18AWG for GE18/24
Standard DC plug	P1J: 2.1øx5.5øx11mm / C+, tuning fork type (refer to page 64 for DC plug list)

Wall-mounted (Interchangeable Type)—12W

Order No. (Main body)	Output	Tol.	R&N	Effi.
GE12I05-P1J	5V, 0~2.00A	±5%	50mV	70%
GE12I07-P1J	7.5V, 0~1.33A	±5%	75mV	72%
GE12I09-P1J	9V, 0~1.33A	±5%	100mV	75%
GE12I12-P1J	12V, 0~1.00A	±3%	120mV	76%
GE12I15-P1J	15V, 0~0.80A	±3%	150mV	76%
GE12I18-P1J	18V, 0~0.83A	±3%	180mV	78%
GE12I24-P1J	24V, 0~0.625A	±3%	240mV	80%

Wall-mounted (Interchangeable Type)—18W

Order No. (Main body)	Output	Tol.	R&N	Effi.
GE18I05-P1J	5V, 0~2.40A	±5%	50mV	72%
GE18I07-P1J	7.5V, 0~1.73A	±5%	75mV	75%
GE18I09-P1J	9V, 0~2.00A	±5%	100mV	75%
GE18I12-P1J	12V, 0~1.50A	±3%	120mV	78%
GE18I15-P1J	15V, 0~1.20A	±3%	150mV	80%
GE18I18-P1J	18V, 0~1.00A	±3%	180mV	80%
GE18I24-P1J	24V, 0~0.75A	±3%	240mV	81%
GE18I48-P1J	48V, 0~0.375A	±3%	300mV	81%

Wall-mounted (Interchangeable Type)—24W

Order No. (Main body)	Output	Tol.	R&N	Effi.
GE24I05-P1J	5V, 0~3.00A	±5%	50mV	72%
GE24I07-P1J	7.5V, 0~2.00A	±5%	75mV	75%
GE24I09-P1J	9V, 0~2.22A	±5%	100mV	75%
GE24I12-P1J	12V, 0~2.00A	±3%	120mV	78%
GE24I15-P1J	15V, 0~1.60A	±3%	150mV	80%
GE24I18-P1J	18V, 0~1.33A	±3%	180mV	80%
GE24I24-P1J	24V, 0~1.00A	±3%	240mV	81%
GE24I48-P1J	48V, 0~0.50A	±3%	300mV	81%

Interchangeable AC Inlet Plug

AC Plug Type	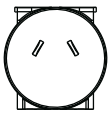	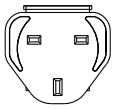
	Australian Type	U.K. Type
AC Plug Order No.	AC Plug-AU	AC Plug-UK
AC Plug Type	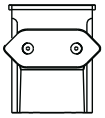	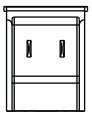
	European Type	U.S. Type
AC Plug Order No.	AC Plug-EU	AC Plug-US

Note: Main body unit and AC plug should be ordered seperately; The main body needs to be used along with any of the AC plug.

Adaptor

18~25W Single Output

▲ ES18A / ES25A
93x 54x 36 mm

▲ ES18B / ES25B
79x 54x 33 mm

▲ ES18C / ES25C
79x 54x 33 mm

Features

- Universal AC input / Full range
- Full output 3~48V safety approved
- Protections: Short circuit / Overload / Over voltage
- Fully enclosed plastic case
- LED indicator for power on
- Approvals:
  UL / CUL / TUV / BSMI / CCC / CB / FCC / CE for ES18 Series
  UL / CUL / TUV / BSMI / CB / FCC / CE for ES25 Series
- 1 year warranty

General Specification (Please refer to www.meanwell.com for detail spec.)

AC input voltage range	90~264VAC
AC inrush current (max.)	Cold start, <20A peak at 115VAC or <40A peak at 230VAC
Overload protection	Hiccup mode, auto-recovery
Over voltage protection	Clamp by zener diode > 120%
Withstand voltage	I/P - O/P: 3kVAC, I/P - FG: 1.5kVAC, 1 minute
Working temperature	0~40°C @ 100% load, 50°C @ 70% load
Safety standards	UL60950-1, CSA 22.2, TUV EN60950-1, BSMI CNS14336, CCC GB4943 approved
EMC standards	EN55022 class B, EN61000-3-2,3, EN61000-4-2,3,4,5,6,11, FCC part 15 class B, CNS13438
Length of output cable	180cm of UL1185, 18AWG
Standard DC plug	P1J: 2.1øx 5.5øx 11mm / C+, tuning fork type (refer to page 64 for DC plug list)

Desktop (IEC 320-C14 / Class I) —18W

Order No.	Output	Tol.	R&N	Effi.
ES18A03-P1J	3.3V, 0.3~2.72A	±5%	50mV	55%
ES18A05-P1J	5.0V, 0.3~3.00A	±5%	50mV	70%
ES18A07-P1J	7.5V, 0.3~2.00A	±5%	80mV	72%
ES18A09-P1J	9.0V, 0.2~2.00A	±5%	80mV	72%
ES18A12-P1J	12V, 0.15~1.50A	±3%	80mV	74%
ES18A15-P1J	15V, 0.1~1.20A	±3%	100mV	77%
ES18A18-P1J	18V, 0.1~1.00A	±3%	150mV	78%
ES18A24-P1J	24V, 0.1~0.75A	±2%	180mV	80%
ES18A28-P1J	28V, 0.06~0.64A	±2%	240mV	81%
ES18A48-P1J	48V, 0.05~0.375A	±2%	240mV	82%

Desktop (IEC 320-C14 / Class I) —25W

Order No.	Output	Tol.	R&N	Effi.
ES25A05-P1J	5.0V, 0.4~4.00A	±5%	50mV	70%
ES25A07-P1J	7.5V, 0.3~2.93A	±5%	80mV	72%
ES25A09-P1J	9.0V, 0.2~2.77A	±5%	80mV	76%
ES25A12-P1J	12V, 0.1~2.08A	±3%	80mV	76%
ES25A15-P1J	15V, 0.1~1.66A	±3%	100mV	78%
ES25A18-P1J	18V, 0.1~1.38A	±3%	150mV	80%
ES25A24-P1J	24V, 0.1~1.04A	±2%	180mV	82%
ES25A28-P1J	28V, 0.1~0.89A	±2%	240mV	82%
ES25A48-P1J	48V, 0.05~0.52A	±2%	240mV	82%

Desktop (IEC 320-C8 / Class II) —18W

Order No.	Output	Tol.	R&N	Effi.
ES18B03-P1J	3.3V, 0.3~2.72A	±5%	50mV	55%
ES18B05-P1J	5.0V, 0.3~3.00A	±5%	50mV	70%
ES18B07-P1J	7.5V, 0.3~2.00A	±5%	80mV	72%
ES18B09-P1J	9.0V, 0.2~2.00A	±5%	80mV	72%
ES18B12-P1J	12V, 0.15~1.50A	±3%	80mV	74%
ES18B15-P1J	15V, 0.1~1.20A	±3%	100mV	77%
ES18B18-P1J	18V, 0.1~1.00A	±3%	150mV	78%
ES18B24-P1J	24V, 0.1~0.75A	±2%	180mV	80%
ES18B28-P1J	28V, 0.06~0.64A	±2%	240mV	81%
ES18B48-P1J	48V, 0.05~0.375A	±2%	240mV	82%

Desktop (IEC 320-C8 / Class II) —25W

Order No.	Output	Tol.	R&N	Effi.
ES25B05-P1J	5.0V, 0.4~4.00A	±5%	50mV	70%
ES25B07-P1J	7.5V, 0.3~2.93A	±5%	80mV	72%
ES25B09-P1J	9.0V, 0.2~2.77A	±5%	80mV	76%
ES25B12-P1J	12V, 0.1~2.08A	±3%	80mV	76%
ES25B15-P1J	15V, 0.1~1.66A	±3%	100mV	78%
ES25B18-P1J	18V, 0.1~1.38A	±3%	150mV	80%
ES25B24-P1J	24V, 0.1~1.04A	±2%	180mV	82%
ES25B28-P1J	28V, 0.1~0.89A	±2%	240mV	82%
ES25B48-P1J	48V, 0.05~0.52A	±2%	240mV	82%

Desktop (IEC 320-C6 / Class I) —18W

Order No.	Output	Tol.	R&N	Effi.
ES18C03-P1J	3.3V, 0.3~2.72A	±5%	50mV	55%
ES18C05-P1J	5.0V, 0.3~3.00A	±5%	50mV	70%
ES18C07-P1J	7.5V, 0.3~2.00A	±5%	80mV	72%
ES18C09-P1J	9.0V, 0.2~2.00A	±5%	80mV	72%
ES18C12-P1J	12V, 0.15~1.50A	±3%	80mV	74%
ES18C15-P1J	15V, 0.1~1.20A	±3%	100mV	77%
ES18C18-P1J	18V, 0.1~1.00A	±3%	150mV	78%
ES18C24-P1J	24V, 0.1~0.75A	±2%	180mV	80%
ES18C28-P1J	28V, 0.06~0.64A	±2%	240mV	81%
ES18C48-P1J	48V, 0.05~0.375A	±2%	240mV	82%

Desktop (IEC 320-C6 / Class I) —25W

Order No.	Output	Tol.	R&N	Effi.
ES25C05-P1J	5.0V, 0.4~4.00A	±5%	50mV	70%
ES25C07-P1J	7.5V, 0.3~2.93A	±5%	80mV	72%
ES25C09-P1J	9.0V, 0.2~2.77A	±5%	80mV	76%
ES25C12-P1J	12V, 0.1~2.08A	±3%	80mV	76%
ES25C15-P1J	15V, 0.1~1.66A	±3%	100mV	78%
ES25C18-P1J	18V, 0.1~1.38A	±3%	150mV	80%
ES25C24-P1J	24V, 0.1~1.04A	±2%	180mV	82%
ES25C28-P1J	28V, 0.1~0.89A	±2%	240mV	82%
ES25C48-P1J	48V, 0.05~0.52A	±2%	240mV	82%

Adaptor

18~25W Single Output

▲ ES18U / ES25U

79x 54x 33 mm

▲ ES18E / ES25E

79x 54x 33 mm

Features

- Universal AC input / Full range
- 2 pole US / European type plug
- Class II power (without earth pin)
- Full output 3~48V safety approval
- Protections:
  Short circuit / Overload / Over voltage
- Fully enclosed plastic case
- LED indicator for power on
- Approvals:
  UL / CUL / BSMI / CB / FCC / CE for US type plug
  TUV / CB / CE for European type plug
- 1 year warranty

General Specification (Please refer to www.meanwell.com for detail spec.)

Order No.	ES18U	ES25U	ES18E	ES25E
AC input voltage range	90~264VAC / 0.5A for18W; 90~264VAC / 0.7A for 25W			
AC inrush current (max.)	Cold start, <20A peak at 115VAC; Cold start, <40A peak at 230VAC			
Overload protection	Hiccup mode, auto-recovery			
Over voltage protection	Clamp by zener diode > 120%			
Setup, rise, hold up time	300ms, 100ms, 16ms@ 230VAC input for ES18; 600ms, 50ms, 16ms@230VAC input for ES25			
Withstand voltage	I/P - O/P: 3kVAC, 1 minute			
Working temperature	0~40°C @ 100% load, 50°C @ 70% load			
Safety standards	UL60950-1, CSA 22.2, CNS14336		EN60950-1	
EMC standards	EN55022 class B, EN61000-3-2,3, EN61000-4-2,3,4,5,6,11, FCC part 15 class B			
Length of output cable	180cm of UL1185, 18AWG			
Standard DC plug	P1J: 2.1øx5.5øx11mm / C+, tuning fork type (refer to page 64 for DC plug list)			

Wall-mounted (US type / Class II) —18W

Order No.	Output	Tol.	R&N	Effi.
ES18U03-P1J	3.3V, 0.3~2.72A	±5%	50mV	55%
ES18U05-P1J	5.0V, 0.3~3.00A	±5%	50mV	70%
ES18U07-P1J	7.5V, 0.3~2.00A	±5%	80mV	72%
ES18U09-P1J	9.0V, 0.2~2.00A	±5%	80mV	72%
ES18U12-P1J	12V, 0.15~1.50A	±3%	80mV	74%
ES18U15-P1J	15V, 0.1~1.20A	±3%	100mV	77%
ES18U18-P1J	18V, 0.1~1.00A	±3%	150mV	78%
ES18U24-P1J	24V, 0.1~0.75A	±2%	180mV	80%
ES18U28-P1J	28V, 0.06~0.64A	±2%	240mV	81%
ES18U48-P1J	48V, 0.05~0.375A	±2%	240mV	82%

Wall-mounted (US type / Class II) —25W

Order No.	Output	Tol.	R&N	Effi.
ES25U05-P1J	5.0V, 0.4~4.00A	±5%	50mV	70%
ES25U07-P1J	7.5V, 0.3~2.93A	±5%	80mV	72%
ES25U09-P1J	9.0V, 0.2~2.77A	±5%	80mV	76%
ES25U12-P1J	12V, 0.1~2.08A	±3%	80mV	76%
ES25U15-P1J	15V, 0.1~1.66A	±3%	100mV	78%
ES25U18-P1J	18V, 0.1~1.38A	±3%	150mV	80%
ES25U24-P1J	24V, 0.1~1.04A	±2%	180mV	82%
ES25U28-P1J	28V, 0.1~0.89A	±2%	240mV	82%
ES25U36-P1J	36V, 0.06~0.69A	±2%	240mV	82%
ES25U48-P1J	48V, 0.05~0.52A	±2%	240mV	82%

Wall-mounted (European type / Class II) —18W

Order No.	Output	Tol.	R&N	Effi.
ES18E03-P1J	3.3V, 0.3~2.72A	±5%	50mV	55%
ES18E05-P1J	5.0V, 0.3~3.00A	±5%	50mV	70%
ES18E07-P1J	7.5V, 0.3~2.00A	±5%	80mV	72%
ES18E09-P1J	9.0V, 0.2~2.00A	±5%	80mV	72%
ES18E12-P1J	12V, 0.15~1.50A	±3%	80mV	74%
ES18E15-P1J	15V, 0.1~1.20A	±3%	100mV	77%
ES18E18-P1J	18V, 0.1~1.00A	±3%	150mV	78%
ES18E24-P1J	24V, 0.1~0.75A	±2%	180mV	80%
ES18E28-P1J	28V, 0.06~0.64A	±2%	240mV	81%
ES18E48-P1J	48V, 0.05~0.375A	±2%	240mV	82%

Wall-mounted (European type / Class II) —25W

Order No.	Output	Tol.	R&N	Effi.
ES25E05-P1J	5.0V, 0.4~4.00A	±5%	50mV	70%
ES25E07-P1J	7.5V, 0.3~2.93A	±5%	80mV	72%
ES25E09-P1J	9.0V, 0.2~2.77A	±5%	80mV	76%
ES25E12-P1J	12V, 0.1~2.08A	±3%	80mV	76%
ES25E15-P1J	15V, 0.1~1.66A	±3%	100mV	78%
ES25E18-P1J	18V, 0.1~1.38A	±3%	150mV	80%
ES25E24-P1J	24V, 0.1~1.04A	±2%	180mV	82%
ES25E28-P1J	28V, 0.1~0.89A	±2%	240mV	82%
ES25E36-P1J	36V, 0.06~0.69A	±2%	240mV	82%
ES25E48-P1J	48V, 0.05~0.52A	±2%	240mV	82%

25W AC-DC Triple Output

- Universal AC input / Full range
- Protections: Short circuit / Overload / Over voltage / Over temp.
- Fully enclosed plastic case
- Fixed switching frequency and regulation
- Topology: Top switch circuit
- LED indicator for power on
- 1 year warranty

▲ P25A
108x 67x 36 mm

▲ P25B
108x 67x 36 mm

AC input voltage range ..... 90~264VAC / 0.8A
AC inrush current(max.) .... Cold start, <60A peak at 230VAC
Overload protection ..... Hiccup mode, auto-recovery
Over voltage protection ..... 110~140% of +5V output
Setup, rise, hold up time ... 200ms, 50ms, 16ms at full load
Withstand voltage ..... I/P-O/P:3kVAC, I/P-FG:1.5kVAC , 1 minute
Working temperature ..... 0~+40°C (refer to output load derating curve)
Safety standards ..... UL1950, CSA 22.2, TUV EN60950-1 approved
EMC standards ..... EN55022 class B, EN61000-3-2,3, ENV50204, EN61000-4-2,3,4,5,6,11
Standard output cable ..... 150cm of UL2464
Length of output cable ..... R1B: DIN 5P

❖ 25W — Triple output (IEC 320-C14 / Class I)

Order No.	Output	Tol.	R&N	Effi.	Max.
P25A13D-R1B	5V, 0.5~2.5A	±5%	50mV	72%	25W
	12V, 0.1~0.8A	±5%	100mV		
	-12V, 0.1~0.3A	±3%	100mV		
P25A14E-R1B	5V, 0.5~2.5A	±5%	50mV	74%	25W
	15V, 0.1~0.5A	±5%	100mV		
	-15V, 0.1~0.3A	±3%	100mV		

❖ 25W — Triple output (IEC 320-C8 / Class II)

Order No.	Output	Tol.	R&N	Effi.	Max.
P25B13D-R1B	5V, 0.5~2.5A	±5%	50mV	72%	25W
	12V, 0.1~0.8A	±5%	100mV		
	-12V, 0.1~0.3A	±3%	100mV		
P25B14E-R1B	5V, 0.5~2.5A	±5%	50mV	74%	25W
	15V, 0.1~0.5A	±5%	100mV		
	-15V, 0.1~0.3A	±3%	100mV		

To Satisfy our customers is our goal —
- High Quality
- Low Cost
- Prompt Delivery
- Best Service

Best products also need best service.
We have authorized distributors all over the world. They have sufficient stock for your prompt delivery. Also they can offer you technical support & RMA services. Please contact your local distributors for more product information. You can also contact us at info@meanwell.com for information of your local distributors.

50W AC-DC Triple Output

147x 76x 43 mm

- 3 pole AC inlet IEC320-C14
- Class I power (with earth pin)
- Protections: Short circuit / Overload / Over voltage
- Fully enclosed plastic case
- LED indicator for power on
- 1 year warranty

AC input voltage range ..... 90~264VAC / 1.6A
AC inrush current(max.) .... Cold start, <40A at 230VAC
Overload protection ..... Hiccup mode, auto-recovery
Over voltage protection ..... 110~140% for +5V output
Hold up time ..... 12ms at full load
Withstand voltage ..... I/P-O/P:3kVAC, I/P-FG:1.5kVAC, 1 minute
Working temperature ..... 0~+40°C (refer to output load derating curve)
Safety standards ..... UL1950, TUV EN60950-1 approved
EMC standards ..... EN55022 class B, EN61000-3-2,3, EN61000-4-2,3,4,5,6,11, ENV50204
Length of output cable ..... 120cm of UL2464
Standard DC plug..... R1B: DIN 5P

Pin Assignment

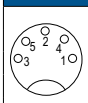

PIN1: COM
PIN2: COM
PIN3: +5VDC
PIN4: -Vout
PIN5: +Vout

Order No.	Output	Tol.	R&N	Effi.	Max.
P50A13D-R1B	5V, 0.5~4.0A	±6%	50mV	72%	50W
	12V, 0.5~2.0A	±10%	100mV		
	-12V, 0.1~0.5A	±12%	100mV		
P50A14E-R1B	5V, 0.5~4.0A	±6%	50mV	74%	50W
	15V, 0.5~1.5A	±10%	100mV		
	-15V, 0.1~0.5A	±12%	100mV		

Optional DC Plug List

Tuning Fork Style	Type	A / OD	B / ID	C / L
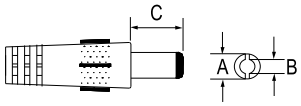	P1I	5.5	2.1	9.5
	P1J	5.5	2.1	11.0
	P1L	5.5	2.5	9.5
	P1M	5.5	2.5	11.0

Barrel Style	Type	A / OD	B / ID	C / L
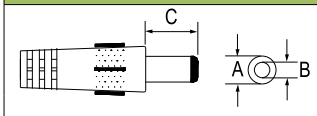	P2I	5.5	2.1	9.5
	P2J	5.5	2.1	11.0
	P2L	5.5	2.5	9.5
	P2M	5.5	2.5	11.0

DIN 5 Pin	Type	Pin Assignment		
			Single	Triple
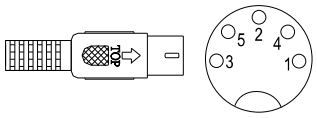	R1B	1	COM	COM
		2	COM	COM
		3	Vout	+5V
		4	COM	-Vout
		5	Vout	+Vout

DIN 4 Pin with lock	Type	Pin Assignment	
		PIN No.	Output
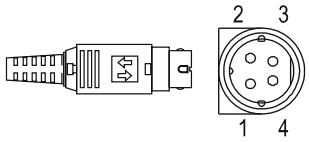	R7B	1	+Vout
		2	GND
		3	GND
		4	+Vout

► Minimum order quantity is varied for different models.

Adaptor

30~50W Single Output and Medical Type

▲ MES30A
108x 67x 36 mm

▲ MES30B
108x 67x 36 mm

▲ MES50A
147x 75.5x 43.2 mm

Features

- Universal AC input / Full range
- Full output 3~48V safety approved
- Protections: Short circuit / Over voltage / Overload / Over temp.
- Fully enclosed plastic case
- Fixed switching frequency and regulation
- Topology: Top switch circuit
- Low leakage current ≤ 0.3mA
- LED indicator for power on
- Medical safety approved
- 2 years warranty

General Specification (Please refer to www.meanwell.com for detail spec.)

Order No.	MES30A	MES30C	MES50A	MES30B
AC input voltage range	90~264VAC / 0.8~0.4A			
AC inrush current (max.)	Cold start, <35A peak at 230VAC			
Overload protection	Hiccup mode, auto-recovery			
Over voltage protection	110~140% rated output voltage		110~150% rated output voltage	110~140% rated output voltage
Setup, rise, hold up time	300ms, 50ms, 16ms at full load			
Withstand voltage	I/P-O/P:5656VDC, I/P-FG:2828VDC, 1 minute			I/P-O/P:5656VDC, 1 minute
Working temperature	0~+65°C (refer to output load derating curve)			
Safety standards	UL2601-1, TUV EN60601-1, IEC601-1 approved			
EMC standards	EN55011 class B, EN61000-3-2,3, EN61000-4-2,3,4,5,6,8,11 (EN60601-1-2)			
Standard output cable	180cm of UL1185,18AWG for 9~48V output ; 120cm of SPT-2,16AWG for 3~7.5V output			
Standard output plug	P1J: 2.1øx5.5øx11mm / C+, tuning fork type (refer to page 64 for DC plug list)			

Desktop (IEC 320-C14 / Class I)— 30W

Order No.	Output	Tol.	R&N	Effi.
MES30A-0P1J	3.3V, 0~5.00A	±8%	30mV	56%
MES30A-1P1J	5V, 0~5.00A	±5%	30mV	70%
MES30A-1-1P1J	7.5V, 0~3.33A	±4%	40mV	72%
MES30A-2P1J	9V, 0~3.33A	±4%	50mV	74%
MES30A-3P1J	12V, 0~2.50A	±3%	50mV	76%
MES30A-4P1J	15V, 0~2.00A	±2%	60mV	78%
MES30A-5P1J	18V, 0~1.66A	±2%	70mV	78%
MES30A-6P1J	24V, 0~1.25A	±2%	80mV	80%
MES30A-7P1J	28V, 0~1.07A	±2%	100mV	80%
MES30A-8P1J	48V, 0~0.62A	±2%	100mV	82%

Desktop (IEC 320-C14 / Class I)— 50W

Order No.	Output	Tol.	R&N	Effi.
MES50A-0R1B	3.3V, 0~7.50A	±10%	50mV	60%
MES50A-1R1B	5V, 0~7.50A	±6%	50mV	67%
MES50A-1-1R1B	7.5V, 0~5.33A	±5%	75mV	70%
MES50A-2P1J	9V, 0~5.00A	±5%	90mV	72%
MES50A-3P1J	12V, 0~4.16A	±3%	100mV	74%
MES50A-4P1J	15V, 0~3.33A	±3%	100mV	75%
MES50A-5P1J	18V, 0~2.77A	±3%	150mV	78%
MES50A-6P1J	24V, 0~2.08A	±2%	150mV	78%
MES50A-7P1J	28V, 0~1.78A	±2%	150mV	80%
MES50A-8P1J	48V, 0~1.04A	±2%	200mV	80%

Desktop (IEC 320-C8 / Class II)— 30W

Order No.	Output	Tol.	R&N	Effi.
MES30B-0P1J	3.3V, 0~5.00A	±8%	30mV	56%
MES30B-1P1J	5V, 0~5.00A	±5%	30mV	70%
MES30B-1-1P1J	7.5V, 0~3.33A	±4%	40mV	72%
MES30B-2P1J	9V, 0~3.33A	±4%	50mV	74%
MES30B-3P1J	12V, 0~2.50A	±3%	50mV	76%
MES30B-4P1J	15V, 0~2.00A	±2%	60mV	78%
MES30B-6P1J	24V, 0~1.25A	±2%	80mV	80%
MES30B-8P1J	48V, 0~0.62A	±2%	100mV	82%

Desktop (IEC 320-C6 / Class I)— 30W

Order No.	Output	Tol.	R&N	Effi.
MES30C-0P1J	3.3V, 0~5.00A	±8%	30mV	56%
MES30C-1P1J	5V, 0~5.00A	±5%	30mV	70%
MES30C-1-1P1J	7.5V, 0~3.33A	±4%	40mV	72%
MES30C-2P1J	9V, 0~3.33A	±4%	50mV	74%
MES30C-3P1J	12V, 0~2.50A	±3%	50mV	76%
MES30C-4P1J	15V, 0~2.00A	±2%	60mV	78%
MES30C-6P1J	24V, 0~1.25A	±2%	80mV	80%
MES30C-8P1J	48V, 0~0.62A	±2%	100mV	82%

Adaptor

40~120W Single Output

Features

- Universal AC input / Full range
- No load power consumption <0.3W for GS40/60; <0.5W for GS90/120
- Pass ENERGY STAR level V (CEC)
- Meet EISA 2007 (Energy Independece and Security Act) for full series
- Built-in active PFC function, PF >0.91 (GS90) & PF>0.95 (GS120)
- 3 pole AC inlet IEC320-C14
- Class I power (with earth pin)
- Protections: Short circuit / Over voltage / Overload / Over tempature
- Fully enclosed plastic case
- LED indicator for power on
- Pass LPS (except for GS120)
- 2 years warranty

General Specification (Please refer to www.meanwell.com for detail spec.)

Order No.		GS40	GS60	GS90	GS120 Under Development
AC input voltage range		90~264VAC / 1.0A	90~264VAC / 1.4A	90~264VAC / 2.0A	
AC inrush current (max.)		Cold start, <65A peak at 230VAC		Cold start, <90A peak at 230VAC	
Overload protection	Range	105%~150% rated output power		110%~150%	105%~135%
	Type	Hiccup mode, auto-recovery			
Over voltage protection		105%~135% rated output voltage			
Setup, rise, hold up time		600ms, 30ms, 50ms at 230VAC input	600ms, 30ms, 50ms at 230VAC input	1000ms, 20ms, 20ms at 230VAC input	2000ms, 20ms, 20ms at 230VAC input
Withstand voltage		I/P-O/P:3kVAC			
Working temperature		0~+60°C	-10~+50°C	0~+50°C	-30~+70°C
Safety standards		UL60950-1, EN60950-1, BSMI CNS14336, CCC GB4943 approved (120W pending)			
EMC standards		EN55022 class B, EN61000-3-2,3, EN61000-4-2,3,4,5,6,8,11, CNS13438, GB9254, FCC part15 class B			
Length of output cable		100cm of UL1185, 16AWG for 5~15V; 180cm of UL1185, 18AWG for 18~48V		100cm of UL1185, 14AWG for 12~15V; 120cm of UL1185, 16AWG for 19~48V	120cm of UL2464, 16AWGx4C
Standard DC plug (refer to page 64 for DC plug list)		P1J: 2.1øx5.5øx11mm / C+, tuning fork type		P1M: 2.5øx5.5øx11mm / C+, tuning fork type	R7B: Power DIN 4P with lock type

Desktop (IEC 320-C14 / Class I)— 40W

Order No.	Output	Tol.	R&N	Effi.
GS40A05-P1J	5V, 0~5.00A	±5%	100mV	80.5%
GS40A07-P1J	7.5V, 0~5.34A	±5%	100mV	85.5%
GS40A09-P1J	9V, 0~4.45A	±5%	100mV	85.0%
GS40A12-P1J	12V, 0~3.34A	±3%	100mV	89.0%
GS40A15-P1J	15V, 0~2.67A	±3%	100mV	89.5%
GS40A18-P1J	18V, 0~2.22A	±3%	150mV	90.0%
GS40A24-P1J	24V, 0~1.67A	±2.5%	180mV	91.0%
GS40A48-P1J	48V, 0~0.84A	±2.5%	240mV	92.0%

Desktop (IEC 320-C14 / Class I)— 60W

Order No.	Output	Tol.	R&N	Effi.
GS60A05-P1J	5V, 0~6.00A	±5%	100mV	79.5%
GS60A07-P1J	7.5V, 0~6.00A	±5%	100mV	84.0%
GS60A09-P1J	9V, 0~6.00A	±5%	100mV	85.0%
GS60A12-P1J	12V, 0~5.00A	±3%	100mV	88.0%
GS60A15-P1J	15V, 0~4.00A	±3%	100mV	88.5%
GS60A18-P1J	18V, 0~3.33A	±3%	150mV	88.5%
GS60A24-P1J	24V, 0~2.50A	±3%	180mV	90.0%
GS60A48-P1J	48V, 0~1.25A	±2.5%	240mV	92.0%

Desktop (IEC 320-C14 / Class I)— 90W

Order No.	Output	Tol.	R&N	Effi.
GS90A12-P1M	12V, 0~6.67A	±5%	80mV	88.0%
GS90A15-P1M	15V, 0~6.00A	±5%	100mV	89.0%
GS90A19-P1M	19V, 0~4.74A	±4%	150mV	89.0%
GS90A24-P1M	24V, 0~3.75A	±3%	180mV	89.5%
GS90A48-P1M	48V, 0~1.875A	±2%	240mV	91.0%

Desktop (IEC 320-C14 / Class I)— 120W Under Development

Order No.	Output	Tol.	R&N	Effi.
GS120A12-R7B	12V, 0~8.5A	±5%	80mV	89%
GS120A15-R7B	15V, 0~7.0A	±5%	100mV	89%
GS120A20-R7B	20V, 0~6.0A	±4%	150mV	90%
GS120A24-R7B	24V, 0~5.0A	±3%	180mV	90%
GS120A48-R7B	48V, 0~2.5A	±2%	240mV	91%

90W Green Power Adaptor

- Universal AC input / Full range
- No load power consumption <0.75W
- 3 pole AC inlet IEC320-C6
- Class I power (with earth pin)
- PF > 0.9 @230VAC
- Protections: Short circuit / Overload / Over voltage
- Fully enclosed plastic case
- LED indicator for power on
- 1 year warranty

AC input voltage range .....90~264VAC or 127~370VDC
AC inrush current(max.) ..... Cold start, <100A at 230VAC
Overload protection ..... 110~150% load, hiccup mode, auto-recovery
Over voltage protection ..... 110~150% rated output voltage (typical)
Hold up time ..... 10ms at full load
Withstand voltage ..... I/P-O/P:1.5kVAC, 1 minute
Working temperature ..... 0~+50°C (refer to output load derating curve)
Safety standards ..... UL60950-1, TUV EN60950-1 approved
EMC standards ..... EN55022 class B, EN61000-3-2,3, EN61000-4-2,3,4,5,6,8,11
Length of output cable ..... 120cm of UL1185, 16AWG
Standard DC plug ..... P1M: 2.5x 5.5x 11mm / C+, tuning fork type
AC power cord ..... YP□+YC14(option); □= 12, 22, 23, 60

Order No.	Output	Tol.	R&N	Effi.
FM90C12-P1M	12V, 0~6.60A	±5%	150mV	80%
FM90C19-P1M	19V, 0~4.75A	±3%	150mV	80%
FM90C24-P1M	24V, 0~3.75A	±3%	150mV	82%

120W Green Power Adaptor

- Universal AC input / Full range
- No load power consumption < 0.5W
- Pass ENERGY STAR level IV (CEC) for full series
- Pass ENERGY STAR level V (CEC) for 24~48V
- Meet EISA 2007(Energy Independence and Security Act)
- Built-in active PFC function, PF>0.95
- 3 pole AC inlet IEC320-C14
- Class I power (with earth pin)
- High power density 5W/in³
- Protections: Short circuit / Overload / Over voltage / Over temp.
- Fully enclosed plastic case
- 2 years warranty

AC input voltage range ..... 90~264VAC or 127~370VDC
Overload protection ..... 105~135% rated output power, hiccup mode, auto-recovery
Over voltage protection ..... 110~140% rated output voltage (typical)
Hold up time ..... 16ms at full load
Withstand voltage ..... I/P-O/P:4.25kVDC, 1 minute
Working temperature ..... 0~+50°C (refer to output load derating curve)
Safety standards ..... UL60950-1, TUV EN60950-1, CCC GB4943 approved
EMC standards ..... EN55022 class B, EN61000-3-2,3, EN61000-4-2,3,4,5,6,8,11, FCC part 15J class B
Length of output cable ..... 12~15V output: 120cm of UL2464, 18AWGx4C
20~48V output: 120cm of UL1185, 16AWGx2C
Standard DC plug.. 12~15V output: Power DIN 4P with lock type (R7B)
20~48V output: 2.5x 5.5x11mm/C+ for tuning fork type (P1M)

Order No.	Output	Tol.	R&N	Effi.
AS-120P-12R7B	12V, 0~8.4A	±4%	100mV	85.5%
AS-120P-15R7B	15V, 0~6.7A	±4%	100mV	87.5%
AS-120P-20P1M	20V, 0~6.0A	±3%	200mV	89.0%
AS-120P-24P1M	24V, 0~5.0A	±2%	200mV	90.0%
AS-120P-48P1M	48V, 0~2.5A	±2%	240mV	89.0%

160W Green Power Adaptor

UL / CUL / TUV / CCC / BSMI / CB / CE / FCC pending

- Universal AC input / Full range
- No load power consumption < 0.5W
- Meet ENERGY STAR level V (CEC)
- Meet EISA 2007(Energy Independence and Security Act)
- Built-in active PFC function, PF>0.95
- 3 pole AC inlet IEC320-C14
- Class I power (with earth pin)
- Protections: Short circuit / Overload / Over voltage / Over temp.
- Fully enclosed plastic case
- LED indicator for power on
- 2 years warranty

AC input voltage range ..... 90~264VAC or 127~370VDC
Overload protection ..... 105~135% rated output power, hiccup mode, auto-recovery
Over voltage protection ..... 105~135% rated output voltage (typical)
Hold up time ..... 20ms at full load
Withstand voltage ..... I/P-O/P:3kVAC, 1 minute
Working temperature ..... -30~+70°C (refer to output load derating curve)
Safety standards ..... Design refer to UL60950-1, TUV EN60950-1, BSMI CNS14336, CCC GB4943
EMC standards ..... EN55022 class B, EN61000-3-2,3, EN61000-4-2,3,4,5,6,8,11, FCC part 15 class B
Length of output cable ..... 120cm of UL2464, 16AWGx 4C
Standard DC plug ..... Power DIN 4P with lock type

Order No.	Output	Tol.	R&N	Effi.
GS160A12-R7B	12V, 0~11.5A	±5%	80mV	90%
GS160A15-R7B	15V, 0~9.6A	±5%	100mV	90%
GS160A20-R7B	20V, 0~8.0A	±4%	150mV	92%
GS160A24-R7B	24V, 0~6.67A	±3%	180mV	92%
GS160A48-R7B	48V, 0~3.34A	±2%	240mV	93%

220W Green Power Adaptor

- Universal AC input / Full range
- No load power consumption < 0.5W
- Pass ENERGY STAR level V (CEC)
- Meet EISA 2007(Energy Independence and Security Act)
- Built-in active PFC function, PF>0.91
- 3 pole AC inlet IEC320-C14
- Class I power (with earth pin)
- Protections: Short circuit / Overload / Over voltage / Over temp.
- Fully enclosed plastic case
- LED indicator for power on
- 2 years warranty

AC input voltage range ..... 90~264VAC or 127~370VDC
Overload protection ..... 105~135% rated output power, hiccup mode, auto-recovery
Over voltage protection ..... 105~135% rated output voltage (typical)
Hold up time ..... 20ms at full load
Withstand voltage ..... I/P-O/P:3kVAC, 1 minute
Working temperature ..... -10~+60°C (refer to output load derating curve)
Safety standards ..... UL60950-1, TUV EN60950-1, BSMI CNS14336, CCC GB4943 approved
EMC standards ..... EN55022 class B, EN61000-3-2,3, EN61000-4-2,3,4,5,6,8,11, FCC part 15 class B, GB9254 class B, CNS13438 class B
Length of output cable ..... 100cm of UL2464, 16AWGx 4C
Standard DC plug ..... Power DIN 4P with lock type

Order No.	Output	Tol.	R&N	Effi.
GS220A12-R7B	12V, 0~15.0A	±5%	80mV	90.0%
GS220A15-R7B	15V, 0~13.4A	±5%	100mV	90.0%
GS220A20-R7B	20V, 0~11.0A	±4%	150mV	92.0%
GS220A24-R7B	24V, 0~9.20A	±3%	180mV	93.5%
GS220A48-R7B	48V, 0~4.60A	±2%	240mV	94.5%

Security Series 55~155W Single and Dual Output

55W 1~2 Output with Battery Charger

CASE: 901 159x 97x 38 mm

- Universal AC input / Full range
- Protections: Short circuit / Overload / Over voltage
- Battery low protection (except for ADS series)
- DC alarm signal (optional)
- Cooling by free air convection
- Fixed switching frequency at 45kHz
- Approvals: UL / CUL / TUV / CB / CE
- 100% full load burn-in test
- 2 years warranty

AC input voltage range ..... 88~264VAC; 124~370VDC
AC inrush current ..... Cold start, 20A at 115VAC, 40A at 230VAC
DC adjustment range ..... 12V, 24V: ±10%
13.8V: 12~14.5V; 27.6V: 24~29V
Overload protection ..... 105~150% hiccup mode, auto-recovery
Over voltage protection ..... CH1: 105~135% rated output voltage
Setup, rise, hold up time ..... 800ms, 50ms, 80ms at full load and 230VAC
Withstand voltage I/P-O/P:3kVAC, I/P-FG:1.5kVAC, 1minute
Working temperature ..... -10°C~60°C(refer to output derating curve)
Safety standards ..... UL60950-1, TUV EN60950-1 approved
EMC standards ..... EN55022 class B, EN61000-3-2,3,
EN61000-4-2,3,4,5,6,8,11, ENV50204
Connection ..... 8P/ 8.25mm pitch terminal block
Packing ..... 0.57kg ; 24pcs / 13.7kg / 0.75CUFT

❖ Single Output with 5V, 4A DC-DC Converter

Model No.	Output	Tol.	R&N	Effi.	Max.
ADS-5512	12V, 0~4.0A	±1%	100mV	74%	51W
	5V, 0~4.0A	±3%	100mV		
ADS-5524	24V, 0~2.5A	±1%	100mV	74%	58W
	5V, 0~4.0A	±3%	100mV		

❖ Single Output with Battery Charger (UPS Function)

Model No.	Output	Tol.	R&N	Effi.	Max.
AD-55A	13.8V, 0~4.0A	±1%	100mV	71%	51W
	13.4V, 0~0.23A	(Charger)			
AD-55B	27.6V, 0~2.0A	±1%	100mV	74%	54W
	26.5V, 0~0.16A	(Charger)			

❖ Dual Output with Battery Charger (UPS Function)

Model No.	Output	Tol.	R&N	Effi.	Max.
ADD-55A	13.8V, 0~3.50A	±1%	100mV	71%	53W
	5V, 0~4.00A	±3%	100mV		
	13.4V, 0~0.23A	(Charger)			
ADD-55B	27.6V, 0~2.00A	±1%	150mV	74%	55W
	5V, 0~4.00A	±3%	150mV		
	26.5V, 0~0.16A	(Charger)			

Block Diagram

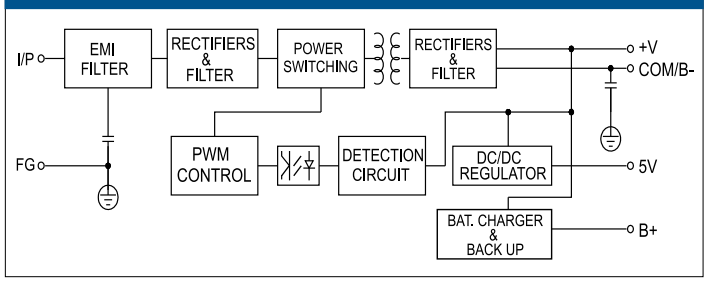

155W 1~2 Output with Battery Charger and PFC Function

CASE: 906 199x 110x 50 mm

- Universal AC input / Full range
- PF>0.92@230VAC and full load
- Protections: Short circuit / Overload / Over voltage
- Battery low protection (except for ADS series)
- Cooling by free air convection
- Fixed switching frequency at 134kHz
- Approvals: UL / CUL / TUV / CB / CE
- 100% full load burn-in test
- 2 years warranty

AC input voltage range ..... 88~264VAC; 124~370VDC
AC inrush current ..... Cold start, 20A at 115VAC, 40A at 230VAC
DC adjustment range ..... 12V, 24V, 48V: ±10%
13.8V: 12~14.5V; 27.6V: 24~29V; 54V: 48~58V
Overload protection ..... CH1,2: 105~135%, charger: 0.51~0.9A;
constant current limiting, auto-recovery
Over voltage protection .... CH1: 115~135% rated output voltage
Setup, rise, hold up time ... 1000ms, 90ms, 24ms at full load and 230VAC
Withstand voltage I/P-O/P:3kVAC, I/P-FG:1.5kVAC, 1minute
Working temperature ..... With fan:-10~50°C@100% , 60°C@80% load
Without fan:-10~50°C@70% , 60°C@50% load
Safety standards ..... UL60950-1, TUV EN60950-1 approved
EMC standards ..... EN55022 class B, EN61000-3-2,3,
EN61000-4-2,3,4,5,6,8,11, ENV50204
Connection ..... 8P/ 9.5mm pitch terminal block
Packing ..... 1.0kg ; 16pcs / 16.0kg / 0.95CUFT

❖ Single Output with 5V, 3A DC-DC Converter

Model No.	Output	Tol.	R&N	Effi.	Max.
ADS-15512	12V, 0~12.5A	±2%	150mV	77%	153W
	5V, 0~3.00A	±3%	100mV		
ADS-15524	24V, 0~6.50A	±1%	150mV	82%	154W
	5V, 0~3.00A	±3%	100mV		
ADS-15548	48V, 0~3.20A	±1%	240mV	82%	154W
	5V, 0~3.00A	±5%	100mV		

❖ Single Output with Battery Charger (UPS Function)

Model No.	Output	Tol.	R&N	Effi.	Max.
AD-155A	13.8V, 0~11.5A	±2%	150mV	80%	152W
	13.3V, 0~0.50A	(Charger)			
AD-155B	27.6V, 0~5.50A	±1%	150mV	84%	152W
	27.1V, 0~0.50A	(Charger)			
AD-155C	54.0V, 0~2.70A	±1%	240mV	84%	157W
	53.5V, 0~0.50A	(Charger)			

❖ Dual Output with Battery Charger (UPS Function)

Model No.	Output	Tol.	R&N	Effi.	Max.
ADD-155A	13.8V, 0~10.5A	±1%	150mV	78%	153W
	5V, 0~3.00A	±3%	100mV		
	13.3V, 0~0.50A	(Charger)			
ADD-155B	27.6V, 0~5.00A	±1%	200mV	81%	153W
	5V, 0~3.00A	±3%	100mV		
	27.1V, 0~0.50A	(Charger)			
ADD-155C	54.0V, 0~2.50A	±1%	240mV	81%	150W
	5V, 0~3.00A	±5%	100mV		
	53.5V, 0~0.20A	(Charger)			

Security Series

60W Single Output with Battery Charger (UPS Function)

- Universal AC input / Full range
- 4"x 2" compact size
- Protections: Short circuit / Overload / Over voltage
- Battery low protection / Battery reverse polarity protection by fuse
- Alarm signal for AC OK and Battery low
- Cooling by free air convection
- 100% full load burn-in test
- 2 years warranty

AC input voltage range ..... 90~264VAC; 127~370VDC
AC inrush current ..... Cold start, 30A at 115VAC, 60A at 230VAC
DC adjustment range ..... CH1, 13.8V: 12~15V; 27.6V: 24~29V
Overload protection ..... 105~150% hiccup mode, auto-recovery
Over voltage protection ..... CH1: 105~135% rated output voltage
Setup, rise, hold up time ..... 800ms, 50ms, 50ms at full load and 230VAC
Withstand voltage I/P-O/P:3kVAC, I/P-FG:1.5kVAC, 1minute
Working temperature ..... -20°C~+70°C(refer to output derating curve)
Safety standards ..... UL60950-1, TUV EN60950-1 approved
EMC standards ..... EN55022 class B, EN61000-3-2,3, EN61000-4-2,3,4,5,6,8,11, ENV50204
Connection ..... 3+6P/ 3.96mm pitch, JST: B3P/B6P-VH
Packing ..... 0.13kg ;96pcs / 13.5kg / 0.89CUFT

Model No.	Output	Tol.	R&N	Effi.	Max.
PSC-60A	13.8V, 0~4.3A	±1%	120mV	84%	59W
	13.8V, 0~1.50A	(Charger)			
PSC-60B	27.6V, 0~2.15A	±1%	240mV	84%	59W
	27.6V, 0~0.75A	(Charger)			

100W Single Output with Battery Charger (UPS Function)

- Universal AC input / Full range
- 5"x3" compact size
- Protections: Short circuit / Overload / Over voltage
- Battery low protection / Battery reverse polarity protection by fuse
- Relay contact signal for AC OK and battery low
- Cooling by free air convection
- 100% full load burn-in test
- 2 years warranty

AC input voltage range ..... 90~264VAC; 127~370VDC
AC inrush current ..... Cold start, 35A at 115VAC, 70A at 230VAC
DC adjustment range ..... CH1, 13.8V: 12~15V; 27.6V: 24~29V
Overload protection ..... 105~150% hiccup mode, auto-recovery
Over voltage protection ..... CH1: 105~135% rated output voltage
Setup, rise, hold up time ..... 2400ms, 30ms, 40ms at full load and 230VAC
Withstand voltage I/P-O/P:3kVAC, I/P-FG:1.5kVAC, 1minute
Working temperature ..... -20°C~+70°C(refer to output derating curve)
Safety standards ..... UL60950-1, TUV EN60950-1 approved
EMC standards ..... EN55022 class B, EN61000-3-2,3, EN61000-4-2,3,4,5,6,8,11, ENV50204
Connection ..... 3+8P/ 3.96mm pitch, 4P/2.5mm pitch, JST:B3P/B8P-VH, B4B-XH

Model No.	Output	Tol.	R&N	Effi.	Max.
PSC-100A	13.8V, 0~7.0A	±1%	100mV	86%	100W
	13.8V, 0~2.5A	(Charger)			
PSC-100B	27.6V, 0~3.50A	±1%	100mV	88%	101W
	27.6V, 0~1.25A	(Charger)			

Video Game

104W AC-DC Triple Output for Video Game

- AC input range selectable by switch
- Protections: Short circuit / Overload
- 2 color LED display for 602A, 606A
- Cooling by free air convection
- 100% full load burn-in test
- Low cost, high reliability
- 2 years warranty

AC input voltage range ..... 88~132VAC/ 176~264VAC selectable by switch
DC adjustment range ..... CH1: -5~+10% rated output voltage
Overload protection ..... 105%~135% shut off, AC recycle to re-start
Setup, rise, hold up time .... 200ms, 50ms, 16ms at full load and 230VAC
Withstand voltage ..... I/P-O/P: 1.5kVAC, I/P-FG:1.5kVAC, 1minute
Working temperature ..... 0~40°C@100%, -10°C@80%, 60°C@60% load
Safety standards ..... UL60950-1, TUV EN60950-1 for MWP-606
TUV EN60950-1 for MWP-608
EMC standards ..... EN55022 class B, EN61000-4-2,3,4
EN60555-2,3 for MWP-606/608 series
Packing ..... 0.9kg ; 16pcs / 15.4kg / 0.95CUFT

❖ MWP-602 Series

Model No.	Output	Tol.	R&N	Effi.	Max.
MWP-602	5V, 3.0~15A	±2%	50mV	75%	104W
	12V, 0.2~3.0A	±8%	120mV		
	-5V, 0.1~1.0A	±10%	60mV		
MWP-602A	5V, 3.0~15A	±2%	50mV	75%	104W
	12V, 0.2~3.0A	±8%	120mV		
	-5V, 0.1~1.0A	±10%	60mV		

❖ MWP-606 Series

Model No.	Output	Tol.	R&N	Effi.	Max.
MWP-606	5V, 3.0~15A	±2%	50mV	75%	104W
	12V, 0.2~4.0A	±8%	120mV		
	-5V, 0.1~1.0A	±10%	60mV		
MWP-606A	5V, 3.0~15A	±2%	50mV	75%	104W
	12V, 0.2~4.0A	±8%	120mV		
	-5V, 0.1~1.0A	±10%	60mV		

❖ MWP-608 Series

Model No.	Output	Tol.	R&N	Effi.	Max.
MWP-608	5V, 3.0~15A	±2%	50mV	80%	104W
	12V, 0.2~4.0A	±8%	120mV		
	24V, 0.2~4.0A	-5%, +10%	150mV		

Who can provide you better services and be a trustworthy partner in the power industry?
— "**MEAN WELL**" tries to be —

We provide specification, drawing, test report and more information, please visit our website —
http://www.meanwell.com

Best products also need best service.
We have authorized distributors all over the world. They have sufficient stock for your prompt delivery. Also they can offer you technical support & RMA services. Please contact your local distributors for more product information. You can also contact us at info@meanwell.com for information of your local distributors.

100W AC-DC ATX Power

- Universal AC input / Full range
- No load power consumption < 1W @240VAC
- 3 pole AC inlet IEC320-C14
- Built-in active PFC function, PF>0.95
- Class I power (with earth pin)
- Protections: Short circuit / Overload / Over voltage / Over temp.
- Power on LED indicator
- Fully enclosed plastic case
- 2 years warranty

Setup, rise, hold up time .....3000ms, 80ms, 40ms at full load and 230VAC
Overload protection .....140~200% load, shut off
Over voltage protection ..... 110~130% rated output voltage (CH1,2,3)
Withstand voltage I/P-O/P:3kVAC
Working temperature ..... 0~+40°C@100%, 50°C@80% load
Safety standards .....IEC60950-1 CB approved by TUV
EMC standards ..... EN55022 class B, EN61000-3-2,3, EN61204-3, EN61000-4-2,3,4,5,6,8,11, ENV50204
Length of output cable .....65cm of UL rated, 18AWGx20C
Standard DC plug ..... Molex 39-01-2200 or equivalent

Order No.	Output	Tol.	R&N	Effi.	Max.
ATX-100	3.3V, 0~6.0A	±5%	100mV	80%	100W (cont.)
	5V, 0~8.0A	±5%	100mV		
	12V, 1~7.0A	±5%	120mV		125W (7 min.)
	-12V, 0~0.5A	±10%	120mV		
	5VSB, 0~2.0A	±5%	100mV		150W (3 min.)

200~300W Industrial ATX PC Power Supply

- 240x 83x 40 mm (200 / 250W)
- 260x 83x 40 mm (300W)

- Universal AC input / Full range
- Low profile for 1U/2U rack system
- Built-in active PFC function, PF>0.94
- Protections: Short circuit / Overload / Over voltage
- With power good and fail signal output
- Forced air cooling by built-in DC fan
- Remote sence on CH1, CH2
- PS-ON signal input
- 24V/3A output with 7A peak capability (IPC-300B)
- 2 years warranty

Hold up time ..... 16ms min. at full load and 115Vac
Overload protection ..... 105%~150% shut off, AC recycle to re-start
Over voltage protection .....110%~140% rated output voltage for CH1~CH3
Withstand voltage .....I/P-O/P, I/P-FG:1.5kVAC, 1minute
Working temperature ..... -10~60°C (refer to output derating curve)
Safety standards ..... UL60950-1, TUV EN60950-1 approved
EMC standards ..... EN55022 class B, EN61000-3-2,-3 EN61000-4-2,3,4,5,6,8,11

Model No.	Output	Tol.	R&N	Effi.	Max.
IPC-200	3.3V, 0~15A	±5%	50mV	75%	200W
	5V, 1~25A	±5%	50mV		
	12V, 1~13A	±7%	120mV		
	-5V, 0~0.5A	±8%	100mV		
	-12V, 0.1~1.0A	±10%	120mV		
	5VSB, 0~2.0A	±5%	50mV		
IPC-250	3.3V, 0~20A	±5%	50mV	75%	250W
	5V, 1~25A	±5%	50mV		
	12V, 1~15A	±7%	120mV		
	-5V, 0~0.5A	±8%	100mV		
	-12V, 0.1~1.0A	±10%	120mV		
	5VSB, 0~2.0A	±5%	50mV		
IPC-300A	3.3V, 0~20A	±5%	50mV	75%	300W
	5V, 1~30A	±5%	50mV		
	12V, 1~18A	±7%	120mV		
	-5V, 0~0.5A	±8%	100mV		
	-12V, 0.1~1.0A	±10%	120mV		
	5VSB, 0~2.0A	±5%	50mV		
IPC-300B	24V, 0~3.0A	±5%	240mV	80%	300W
	5V, 1~30A	±5%	50mV		
	12V, 1~18A	±7%	120mV		
	-5V, 0~0.5A	±8%	100mV		
	-12V, 0.1~1.0A	±10%	120mV		
	5VSB, 0~2.0A	±5%	50mV		

250~350W ATX PC Power Supply

- Universal AC input for YP-350J
- AC input 230VAC only for YP-350A/400A/450A-EU
- AC input range selectable by switch for YP-350A/ 400A / 450A-AA
- Built-in passive PFC for YP-350A/400A/450A-EU
- Built-in active PFC function, PF>0.95 for YP-350J
- Built-in passive PFC function, PF>0.65 for YP-350A/400A/450A-EU
- Protections: Short circuit / Overload
- Power good / fail signal
- Forced air cooling by built-in DC fan
- 100% full load burn-in test
- Low cost, high reliability
- Approvals:
  YP-350A / 400A / 450A-AA: CSA / CB / FCC
  YP-350A / 400A / 450A-EU: TUV / CB / CE
- 2 years warranty for YP-350J
- 1 year warranty for YP-350A/400A/450A

YP-350J

YP-350A / 400A / 450A

Hold up time ..... 8ms min. at full load (YP-350A / 400A / 450A), 10ms min. at full load (YP-350J)
Overload protection .....105%~180% shut off, AC recycle to re-start
Withstand voltage ..... I/P-O/P, I/P-FG:1.5kVAC, 1minute
Working temperature ..... 0~40°C at full load and 230VAC (typical)
Safety standards .....UL1950, CSA22.2, EN60950-1 approved

❖ **103~132VAC / 206~264VAC selectable or 206~264VAC only**

Model No.	Output	Tol.	R&N	Effi.	Max.
YP-350A-☐	3.3V, 2.0~17A	±5%	50mV	70%	250W
	5V, 2.0~18A	±5%	50mV		
	$12V_1$, 1.0~8.0A	±5%	120mV		
	$12V_2$, 1.0~14A	±5%	120mV		
	-5V, 0.1~0.3A	±10%	50mV		
	-12V, 0.1~0.8A	±10%	120mV		
	5VSB, 0~2.0A	±5%	50mV		
YP-400A-☐	3.3V, 2.0~20A	±5%	50mV	70%	300W
	5V, 2.0~20A	±5%	50mV		
	$12V_1$, 1.0~8.0A	±5%	120mV		
	$12V_2$, 1.0~14A	±5%	120mV		
	-5V, 0.1~0.3A	±10%	50mV		
	-12V, 0.1~0.8A	±10%	120mV		
	5VSB, 0~2.0A	±5%	50mV		
YP-450A-☐	3.3V, 2.0~22A	±5%	50mV	70%	350W
	5V, 2.0~21A	±5%	50mV		
	$12V_1$, 1.0~10A	±5%	120mV		
	$12V_2$, 1.0~15A	±5%	120mV		
	-5V, 0.1~0.3A	±10%	50mV		
	-12V, 0.1~0.8A	±10%	120mV		
	5VSB, 0~2.0A	±5%	50mV		

☐=AA (115/230VAC selectable and without PFC function),
EU (230VAC only and with passive PFC function)

❖ **24V Output and Active PFC>0.95 (100~264VAC Input)**

Model No.	Output	Tol.	R&N	Effi.	Max.
YP-350J-AA	3.3V, 0.3~14A	±5%	50mV	70%	350W
	5V, 0.1~21A	±5%	50mV		
	12V, 0~15A	+8%,-2%	120mV		
	24V, 0~5.0A	+8%,-2%	150mV		
	-5V, 0~0.3A	±5%	100mV		
	-12V, 0~0.8A	±10%	120mV		
	5VSB, 0~2.0A	±5%	50mV		

DC/DC Converter

0.5~1W Module Type

0.5W DC-DC Regulated Single Output

0.89"x 0.39"x 0.33"

- 1000VDC I/O isolation
- Internal SMD technology
- Built-in EMI filter
- Protection: Short circuit
- Cooling by free air convection
- Non-conductive plastic case
- Dual in line package
- 100% full load burn-in test
- Low cost, high reliability
- 2 years warranty

Mechanism

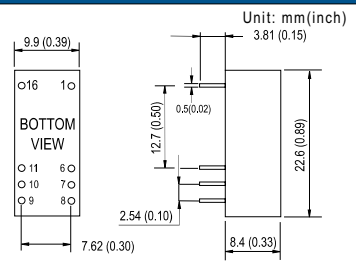

Pin Configuration

Pin No.	Output
1 & 16	+Vin
6 & 11	-Vout
7 & 10	+Vout
8 & 9	-Vin

Voltage set point accuracy.... ±2% (typical)
Line regulation ..... ±1% (max.)
Load regulation ..... ±1% (max.)@10~100% load
Input reflected ripple 120mVp-p
Efficiency ..... 60% (typical)
Short circuit protection .....continuous, auto-recovery
Switching frequency ..... 50kHz (min.)
I/O isolation voltage ..... 1000VDC (min.)
I/O isolation resistance ..... 100MΩ (min.)@ 500VDC
Isolation capacitance ..... 80pF (max.)
Working temperature .....-25°C to +60°C (no derating), +71°C@80% load
Storage temperature ..... -25°C to +105°C
Temp. Coefficient ..... ±0.03% / °C (max.)
Case material .....non-conductive plastic

Model No.	Input (VDC)	Output (VDC)	Current (mA)	R&N (mVp-p)
SRS-0505	5±10%	5	100	100
SRS-0509	5±10%	9	56	100
SRS-0512	5±10%	12	42	100
SRS-0515	5±10%	15	34	100
SRS-1205	12±10%	5	100	100
SRS-1209	12±10%	9	56	100
SRS-1212	12±10%	12	42	100
SRS-1215	12±10%	15	34	100
SRS-2405	24±10%	5	100	100
SRS-2409	24±10%	9	56	100
SRS-2412	24±10%	12	42	100
SRS-2415	24±10%	15	34	100
SRS-4805	48±10%	5	100	100
SRS-4809	48±10%	9	56	100
SRS-4812	48±10%	12	42	100
SRS-4815	48±10%	15	34	100

1W DC-DC Unregulated Single Output

0.89"x 0.39"x 0.33"

- 1000VDC I/O isolation
- Internal SMD technology
- Built-in EMI filter
- Protection: Short circuit
- Cooling by free air convection
- Non-conductive plastic case
- Dual in line package
- SIP package is available
- 100% full load burn-in test
- Low cost, high reliability
- 2 years warranty

Mechanism

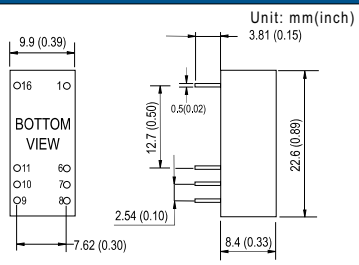

Pin Configuration

Pin No.	Output
1 & 16	+Vin
6 & 11	-Vout
7 & 10	+Vout
8 & 9	-Vin

Voltage set point accuracy ...±2% (max.)
Line regulation ..... ±1.2% (max.) for 1% input variation
Load regulation ..... ±8% (max.)@20~100% load
Input reflected ripple 120mVp-p
Efficiency ..... 83% (typical)
Short circuit protection ..... Momentary
Switching frequency ..... 50kHz (min.)
I/O isolation voltage ..... 1000VDC (min.)
I/O isolation resistance ..... 100MΩ (min.)@ 500VDC
Isolation capacitance ..... 80pF (max.)
Working temperature ..... -25°C to +60°C (no derating), +71°C@80% load
Storage temperature .....-25°C to +105°C
Temp. Coefficient ..... ±0.03% / °C (max.)
Case material ..... non-conductive plastic

Model No.	Input (VDC)	Output (VDC)	Current (mA)	R&N (mVp-p)
SUS01L-05	5±10%	5	200	100
SUS01L-09	5±10%	9	111	100
SUS01L-12	5±10%	12	84	100
SUS01L-15	5±10%	15	67	100
SUS01M-05	12±10%	5	200	100
SUS01M-09	12±10%	9	111	100
SUS01M-12	12±10%	12	84	100
SUS01M-15	12±10%	15	67	100
SUS01N-05	24±10%	5	200	100
SUS01N-09	24±10%	9	111	100
SUS01N-12	24±10%	12	84	100
SUS01N-15	24±10%	15	67	100
SUS01O-05	48±10%	5	200	100
SUS01O-09	48±10%	9	111	100
SUS01O-12	48±10%	12	84	100
SUS01O-15	48±10%	15	67	100

DC/DC Converter

1W Module Type

1W DC-DC Unregulated Single Output

0.50"x 0.30"x 0.24"

- 1000VDC I/O isolation
- Internal SMD technology
- Protection: Short circuit
- Cooling by free air convection
- Non-conductive plastic case
- SMD package style
- 100% full load burn-in test
- Low cost, high reliability
- 1 year warranty

Mechanism

Unit: mm(inch)

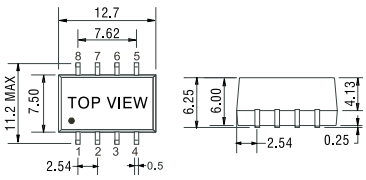

Pin Configuration

Pin No.	Output
1	-Vin
2	+Vin
3	NC
4	-Vout
5	+Vout
6	NC
7	NC
8	NC

Voltage set point accuracy ..... ±8% (max.)
Line regulation ..... ±1.2% (max.) for 1% input variation
Load regulation ..... ±8% (max.)@20~100% load
Input reflected ripple 100mVp-p
Efficiency ..... 75% (typical)
Short circuit protection .....Momentary
Switching frequency .....100kHz (typical)
I/O isolation voltage ..... 1000VDC (min.)
I/O isolation resistance ..... 100MΩ (min.)@ 500VDC
Working temperature ..... -40°C to +85°C
Storage temperature .....-40°C to +105°C
Temp. Coefficient ..... ±0.03% / °C (max.)
Case material ..... non-conductive plastic
Safety standards ..... UL60950-1 approved

Model No.	Input (VDC)	Output (VDC)	Current (mA)	R&N (mVp-p)
SBT01L-05	5±10%	5	200	100
SBT01L-09	5±10%	9	111	100
SBT01L-12	5±10%	12	84	100
SBT01L-15	5±10%	15	67	100
SBT01M-05	12±10%	5	200	100
SBT01M-09	12±10%	9	111	100
SBT01M-12	12±10%	12	84	100
SBT01M-15	12±10%	15	67	100

Customer Satisfaction —
Today's effort, tomorrow's reward. Continuously improve CQTS to satisfy customer is our goal.

Best products also need best service.
We have authorized distributors all over the world. They have sufficient stock for your prompt delivery. Also they can offer you technical support & RMA services. Please contact your local distributors for more product information. You can also contact us at info@meanwell.com for information of your local distributors.

1W DC-DC Unregulated Single and Dual Output

0.60"x 0.30"x 0.24"

- 3000VDC I/O isolation
- Internal SMD technology
- Protection: Short circuit
- Cooling by free air convection
- Non-conductive plastic case
- SMD package style
- 100% full load burn-in test
- Low cost, high reliability
- 1 year warranty

Mechanism

Unit: mm(inch)

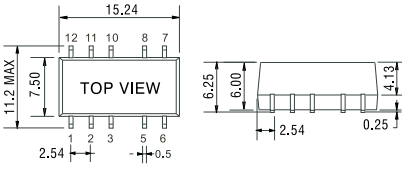

Pin Configuration

Pin No.	Output	
	Single	Dual
1	-Vin	-Vin
2	+Vin	+Vin
3	NC	NC
5	-Vout	COM
6	NC	-Vout
7	NC	NC
8	+Vout	+Vout
10	NC	NC
11	NC	NC
12	NC	NC

Voltage set point accuracy .....±8% (max.)
Line regulation ..... ±1.2% (max.) for 1% input variation
Load regulation ..... ±8% (max.)@20~100% load
Efficiency ..... 79% (typical)
Short circuit protection .....Momentary
Switching frequency ..... 100kHz (typical)
I/O isolation voltage ..... 3000VDC (min.)
I/O isolation resistance ..... 100MΩ (min.)@ 500VDC
Working temperature ..... -40°C to +85°C
Storage temperature .....-40°C to +105°C
Temp. Coefficient ..... ±0.03% / °C (max.)
Case material ..... non-conductive plastic
Safety standards ..... UL60950-1 approved

Model No.	Input (VDC)	Output (VDC)	Current (mA)	R&N (mVp-p)
SFT01L-05	5±10%	5	200	100
SFT01L-09	5±10%	9	111	100
SFT01L-12	5±10%	12	84	100
SFT01L-15	5±10%	15	67	100
SFT01M-05	12±10%	5	200	100
SFT01M-09	12±10%	9	111	100
SFT01M-12	12±10%	12	84	100
SFT01M-15	12±10%	15	67	100

Model No.	Input (VDC)	Output (VDC)	Current (mA)	R&N (mVp-p)
DET01L-05	5±10%	±5	±100	100
DET01L-09	5±10%	±9	±56	100
DET01L-12	5±10%	±12	±42	100
DET01L-15	5±10%	±15	±33	100
DET01M-05	12±10%	±5	±100	100
DET01M-09	12±10%	±9	±56	100
DET01M-12	12±10%	±12	±42	100
DET01M-15	12±10%	±15	±33	100

DC/DC Converter

1W Module Type

1W DC-DC Regulated Single Output

- 1000VDC I/O isolation
- Internal SMD technology
- Built-in EMI filter
- Protection: Short circuit
- Cooling by free air convection
- Non-conductive plastic case
- Single in line package
- DIP package is available
- 100% full load burn-in test
- Low cost, high reliability
- 2 years warranty

Mechanism

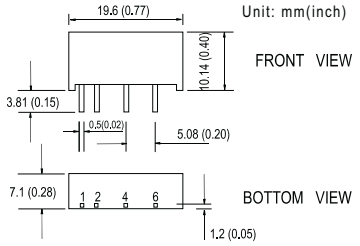

Pin Configuration

Pin No.	Output
1	+Vout
2	-Vin
4	-Vout
6	+Vout

Voltage set point accuracy ..... ±2% (typical)
Line regulation .....±0.5% (max.)
Load regulation .....±0.5% (max.)@10~100% load
Efficiency ..... 80% (typical)
Short circuit protection ..... Continuous, auto-recovery
Switching frequency ..... 100kHz (min.)
I/O isolation voltage ..... 1000VDC (min.)
I/O isolation resistance .....100MΩ (min.)
Isolation capacitance ..... 80pF (max.)
Working temperature ..... -40°C to +70°C (no derating), 85°C@50% load
Storage temperature .....-25°C to +105°C
Temp. Coefficient ..... ±0.03% / °C (max.)
Case material ..... non-conductive plastic
EMI .....Compliance to EN55022 Class B, FCC part15 Class B

Model No.	Input (VDC)	Output (VDC)	Current (mA)	R&N (mVp-p)
SPR01L-05	5±10%	5	200	100
SPR01L-09	5±10%	9	100	100
SPR01L-12	5±10%	12	84	100
SPR01L-15	5±10%	15	67	100
SPR01M-05	12±10%	5	200	100
SPR01M-09	12±10%	9	100	100
SPR01M-12	12±10%	12	84	100
SPR01M-15	12±10%	15	67	100
SPR01N-05	24±10%	5	200	100
SPR01N-09	24±10%	9	100	100
SPR01N-12	24±10%	12	84	100
SPR01N-15	24±10%	15	67	100
SPR01O-05	48±10%	5	200	100
SPR01O-09	48±10%	9	100	100
SPR01O-12	48±10%	12	84	100
SPR01O-15	48±10%	15	67	100

1W DC-DC Unregulated Single Output

- 1500VDC I/O isolation
- Operating temperature range of -40~85°C without derating
- Internal SMD technology
- Built-in EMI filter
- Protection: Short circuit
- Cooling by free air convection
- Non-conductive plastic case
- Dual in line package for SMA01
- SIP package for SMU01
- 100% full load burn-in test
- Industry standard pinout
- 2 years warranty

Mechanism

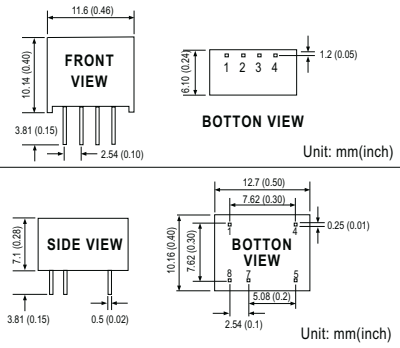

Pin Configuration

SMU01

Pin No.	Output
1	-Vin
2	+Vin
3	-Vout
4	+Vout

SMA01

Pin No.	Output
1	-Vin
4	+Vin
5	+Vout
7	-Vout
8	NC

Voltage set point accuracy ..... ±2% (max.)
Line regulation ..... ±1.2% (max.) for 1% input variation
Load regulation ..... ±8% (max.)@20~100% load
Input reflected ripple 100mVp-p
Efficiency ..... 82% (typical)
Short circuit protection ..... Momentary
Switching frequency ..... 100kHz (min.)
I/O isolation voltage ..... 1500VDC (min.)
I/O isolation resistance ..... 100MΩ (min.)@ 500VDC
Isolation capacitance ..... 80pF (max.)
Working temperature ..... -40°C to +85°C (no derating)
Storage temperature ..... -25°C to +105°C
EMI ..... Compliance to EN55022 Class B, FCC part15 Class B

Model No.	Input (VDC)	Output (VDC)	Current (mA)	R&N (mVp-p)
SMU01L-05	5±10%	5	200	100
SMU01L-09	5±10%	9	110	100
SMU01L-12	5±10%	12	84	100
SMU01L-15	5±10%	15	67	100
SMU01M-05	12±10%	5	200	100
SMU01M-09	12±10%	9	110	100
SMU01M-12	12±10%	12	84	100
SMU01M-15	12±10%	15	67	100
SMU01N-05	24±10%	5	200	100
SMU01N-09	24±10%	9	110	100
SMU01N-12	24±10%	12	84	100
SMU01N-15	24±10%	15	67	100

Model No.	Input (VDC)	Output (VDC)	Current (mA)	R&N (mVp-p)
SMA01L-05	5±10%	5	200	100
SMA01L-09	5±10%	9	110	100
SMA01L-12	5±10%	12	84	100
SMA01L-15	5±10%	15	67	100
SMA01M-05	12±10%	5	200	100
SMA01M-09	12±10%	9	110	100
SMA01M-12	12±10%	12	84	100
SMA01M-15	12±10%	15	67	100
SMA01N-05	24±10%	5	200	100
SMA01N-09	24±10%	9	110	100
SMA01N-12	24±10%	12	84	100
SMA01N-15	24±10%	15	67	100

DC/DC Converter

2~3W Module Type

2W DC-DC Unregulated Single Output

0.77"x 0.28"x 0.4"

- 3000VDC I/O isolation
- Internal SMD technology
- Built-in EMI filter
- Protection: Short circuit
- Cooling by free air convection
- Non-conductive plastic case
- Single in line package
- 100% full load burn-in test
- Low cost, high reliability
- 2 years warranty

Mechanism

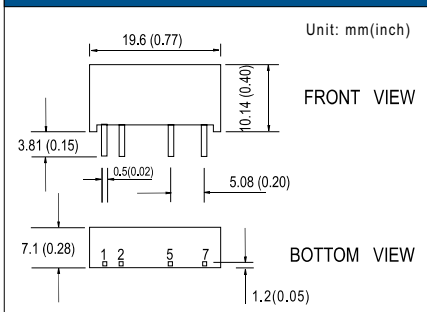

Pin Configuration

Pin No.	Output
1	+Vin
2	-Vin
5	-Vout
7	+Vout

Voltage set point accuracy ... ±2% (max.)
Line regulation ..... ±1.2% (max.) for 1% input variation
Load regulation ..... ±8% (max.)@20~100% load
Efficiency ..... 83% (typical)
Short circuit protection ..... Momentary
Switching frequency ..... 100kHz (min.)
I/O isolation voltage ..... 3000VDC (min.)
I/O isolation resistance ..... 100MΩ (min.)
Isolation capacitance ..... 80pF (max.)
Working temperature ..... -25°C to +60°C (no derating), +71°C@80% load
Storage temperature ..... -25°C to +105°C
Temp. Coefficient ..... ±0.03% / °C (max.)
Case material ..... non-conductive plastic
EMI ..... Compliance to EN55022 Class B, FCC part15 Class B

Model No.	Input (VDC)	Output (VDC)	Current (mA)	R&N (mVp-p)
SPU02L-05	5±10%	5	400	100
SPU02L-12	5±10%	12	167	100
SPU02L-15	5±10%	15	133	100
SPU02M-05	12±10%	5	400	100
SPU02M-12	12±10%	12	167	100
SPU02M-15	12±10%	15	133	100
SPU02N-05	24±10%	5	400	100
SPU02N-12	24±10%	12	167	100
SPU02N-15	24±10%	15	133	100

Who can provide you better services and be a trustworthy partner in the power industry?
— "**MEAN WELL**" tries to be —

Products —
• One Stop Shopping • Total Solution

2~3W DC-DC Regulated Single Output

0.86"x 0.36"x 0.44"

- 2:1 wide input range
- 4:1 wide input range (option) for SPA02
- 1000VDC I/O isolation
- 3000VDC I/O isolation (option) for SPA02
- Built-in remote ON/OFF control
- Built-in EMI filter
- Protection: Short circuit / Overload
- Cooling by free air convection
- Non-conductive plastic case
- Single in line package
- 100% full load burn-in test
- Modified models available: output 3.3V / 9V
- 2 years warranty

Mechanism

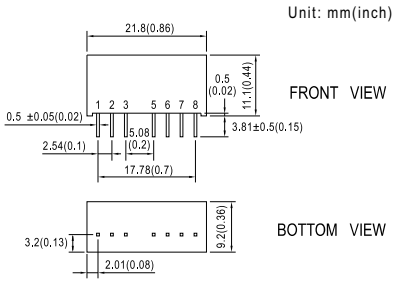

Pin Configuration

Pin No.	Output
1	-Vin
2	+Vin
3	R.C.
5	N.C.
6	+Vout
7	-Vout
8	N.C.

Voltage set point accuracy ..... ±2% (max.)
Line regulation ..... ±0.5% (max.)
Load regulation ..... ±0.5% (max.)@10~100% load
Efficiency ..... 82% (typical)
Short circuit protection ..... Continuous, auto-recovery
Overload protection ..... 150%~250%, auto-recovery
Switching frequency ..... 100KHz (min.)
I/O isolation voltage ..... 1000VDC (min.)
I/O isolation resistance ..... 100MΩ (min.)
Isolation capacitance ..... 80pF (max.)
Working temperature ..... -40°C to +70°C (no derating), +85°C@50% load
Storage temperature ..... -25°C to +105°C
Temp. Coefficient ..... ±0.03% / °C (max.)
Case material ..... non-conductive plastic
EMI ..... Compliance to EN55022 Class B, FCC part15 Class B

Model No.	Input (VDC)	Output (VDC)	Current (mA)	R&N (mVp-p)
SPA02E-05	4.5~9	5	400	60
SPA02E-12	4.5~9	12	150	60
SPA02E-15	4.5~9	15	120	60
SPA02A-05	9~18	5	400	60
SPA02A-12	9~18	12	167	60
SPA02A-15	9~18	15	133	60
SPA02B-05	18~36	5	400	60
SPA02B-12	18~36	12	167	60
SPA02B-15	18~36	15	133	60
SPA02C-05	36~72	5	400	60
SPA02C-12	36~72	12	167	60
SPA02C-15	36~72	15	133	60

Model No.	Input (VDC)	Output (VDC)	Current (mA)	R&N (mVp-p)
SPB03E-05	4.5~9	5	600	50
SPB03E-12	4.5~9	12	250	60
SPB03E-15	4.5~9	15	200	60
SPB03A-05	9~18	5	600	50
SPB03A-12	9~18	12	250	60
SPB03A-15	9~18	15	200	60
SPB03B-05	18~36	5	600	50
SPB03B-12	18~36	12	250	60
SPB03B-15	18~36	15	200	60
SPB03C-05	36~72	5	600	50
SPB03C-12	36~72	12	250	60
SPB03C-15	36~72	15	200	60

DC/DC Converter

3~5W Module Type

3W DC-DC Regulated Single and Dual Output

1.25"x 0.8"x 0.48"

- 2:1 wide input range
- 4:1 wide input range (option)
- 1000VDC I/O isolation
- 3000VDC I/O isolation (option)
- Built-in EMI filter
- Protection: Short circuit / Overload
- Cooling by free air convection
- Five-sided shield metal case
- 100% full load burn-in test
- Low cost, high reliability
- 2 years warranty

Mechanism

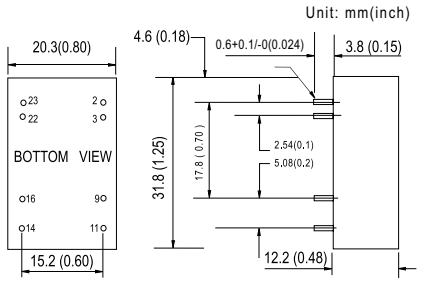

Pin Configuration

Pin No.	Output	
	Single	Dual
2&3	-Vin	-Vin
9	NC	COM
11	NC	-Vout
14	+Vout	+Vout
16	-Vout	COM
22&23	+Vin	+Vin

Voltage set point accuracy ..... ±2% (max.)
Line regulation ..... ±0.5% (max.)
Load regulation ..... ±0.5% (max.)@10~100% load
Efficiency .....82% (typical)
Short circuit protection .....Continuous, auto-recovery
Overload protection ..... 160~250%, auto-recovery
I/O isolation voltage .....1000VDC (min.)
I/O isolation resistance ..... 100MΩ (min.)@ 500VDC
Isolation capacitance ..... 80pF (max.)
Working temperature ..... -25°C to +60°C (no derating), +71°C@80% load
Storage temperature ..... -25°C to +105°C
Temp. Coefficient ..... ±0.03% / °C (max.)
Case material ..... Five-sided shield metal case
EMI ..... Compliance to EN55022 Class B, FCC part15 Class B

❖ Single Output

Model No.	Input (VDC)	Output (VDC)	Current (mA)	R&N (mVp-p)
SCW03A-05	9~18	5	600	50
SCW03A-12	9~18	12	250	60
SCW03A-15	9~18	15	200	60
SCW03B-05	18~36	5	600	50
SCW03B-12	18~36	12	250	60
SCW03B-15	18~36	15	200	60
SCW03C-05	36~72	5	600	50
SCW03C-12	36~72	12	250	60
SCW03C-15	36~72	15	200	60

❖ Dual Output

Model No.	Input (VDC)	Output (VDC)	Current (mA)	R&N (mVp-p)
DCW03A-05	9~18	±5	±300	50
DCW03A-12	9~18	±12	±125	60
DCW03A-15	9~18	±15	±100	60
DCW03B-05	18~36	±5	±300	50
DCW03B-12	18~36	±12	±125	60
DCW03B-15	18~36	±15	±100	60
DCW03C-05	36~72	±5	±300	50
DCW03C-12	36~72	±12	±125	60
DCW03C-15	36~72	±15	±100	60

5~6W DC-DC Regulated Single and Dual Output

1.25"x 0.8"x 0.48"

- 2:1 wide input range
- 4:1 wide input range(option)
- 1000VDC I/O isolation
- 3000VDC I/O isolation(option)
- Built-in EMI filter
- Protection: Short circuit / Overload
- Cooling by free air convection
- Five-sided shield metal case
- 100% full load burn-in test
- Low cost, high reliability
- 2 years warranty

Mechanism

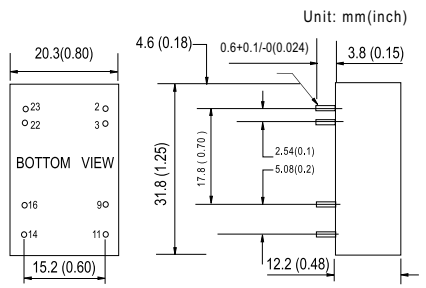

Pin Configuration

Pin No.	Output	
	Single	Dual
2&3	-Vin	-Vin
9	NC	COM
11	NC	-Vout
14	+Vout	+Vout
16	-Vout	COM
22&23	+Vin	+Vin

Voltage set point accuracy ..... ±2% (max.)
Line regulation ..... ±0.5% (max.)
Load regulation ..... ±0.5% (max.)@20~100% load
Efficiency .....85% (typical)
Short circuit protection .....continuous, auto-recovery
Overload protection ..... 150~250%, auto-recovery
I/O isolation voltage ..... 1000VDC (min.)
I/O isolation resistance ..... 100MΩ (min.)@ 500VDC
Isolation capacitance ..... 80pF (max.)
Working temperature .....-25°C to +60°C (no derating), +71°C@80% load
Storage temperature ..... -25°C to +105°C
Temp. Coefficient .....±0.03% / °C (max.)
Case material ..... Five-sided shield metal case
EMI ..... Compliance to EN55022 Class B, FCC part15 Class B

❖ Single Output

Model No.	Input (VDC)	Output (VDC)	Current (mA)	R&N (mVp-p)
SCW05A-05	9~18	5	1000	50
SCW05A-09	9~18	9	556	60
SCW05A-12	9~18	12	470	60
SCW05A-15	9~18	15	400	60
SCW05B-05	18~36	5	1000	50
SCW05B-09	18~36	9	556	60
SCW05B-12	18~36	12	470	60
SCW05B-15	18~36	15	400	60
SCW05C-05	36~72	5	1000	50
SCW05C-09	36~72	9	556	60
SCW05C-12	36~72	12	470	60
SCW05C-15	36~72	15	400	60

❖ Dual Output

Model No.	Input (VDC)	Output (VDC)	Current (mA)	R&N (mVp-p)
DCW05A-05	9~18	±5	±500	50
DCW05A-12	9~18	±12	±230	60
DCW05A-15	9~18	±15	±190	60
DCW05B-05	18~36	±5	±500	50
DCW05B-12	18~36	±12	±230	60
DCW05B-15	18~36	±15	±190	60
DCW05C-05	36~72	±5	±500	50
DCW05C-12	36~72	±12	±230	60
DCW05C-15	36~72	±15	±190	60

DC/DC Converter

5~8W Module Type

5W DC-DC Regulated Single and Dual Output

2"x 1"x 0.44"

- 2:1 wide input range
- 4:1 wide input range(option)
- 1000VDC I/O isolation
- 3000VDC I/O isolation(option)
- Built-in EMI filter
- Protection: Short circuit / Overload
- Cooling by free air convection
- Six-sided shield metal case
- 100% full load burn-in test
- Low cost, high reliability
- 2 years warranty

Mechanism

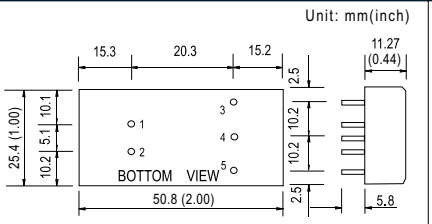

Pin Configuration

Pin No.	Output	
	Single	Dual
1	+Vin	+Vin
2	-Vin	-Vin
3	+Vout	+Vout
4	No Pin	COM
5	-Vout	-Vout

Voltage set point accuracy ...±2% (max.)
Line regulation .....±0.2% (max.)
Load regulation .....±0.5% (max.)@10~100% load
Efficiency ..... 85% (typical)
Short circuit protection ..... continuous, auto-recovery
Overload protection ..... 160~250%, auto-recovery
I/O isolation voltage ..... 1000VDC (min.)
I/O isolation resistance ..... 100MΩ (min.)@ 500VDC
Working temperature ..... -25°C to +60°C (no derating), +71°C@80% load
Storage temperature .....-25°C to +105°C
Temp. Coefficient ..... ±0.03% / °C (max.)
Case material ..... Six-sided shield metal case
EMI ..... Compliance to EN55022 Class B, FCC part15 Class B

❖ Single Output

Model No.	Input (VDC)	Output (VDC)	Current (mA)	R&N (mVp-p)
SLW05A-05	9~18	5	1000	50
SLW05A-09	9~18	9	556	60
SLW05A-12	9~18	12	417	60
SLW05A-15	9~18	15	333	60
SLW05B-05	18~36	5	1000	50
SLW05B-09	18~36	9	556	60
SLW05B-12	18~36	12	417	60
SLW05B-15	18~36	15	333	60
SLW05C-05	36~72	5	1000	50
SLW05C-09	36~72	9	556	60
SLW05C-12	36~72	12	417	60
SLW05C-15	36~72	15	333	60

❖ Dual Output

Model No.	Input (VDC)	Output (VDC)	Current (mA)	R&N (mVp-p)
DLW05A-05	9~18	±5	±500	50
DLW05A-12	9~18	±12	±208	60
DLW05A-15	9~18	±15	±167	60
DLW05B-05	18~36	±5	±500	50
DLW05B-12	18~36	±12	±208	60
DLW05B-15	18~36	±15	±167	60
DLW05C-05	36~72	±5	±500	50
DLW05C-12	36~72	±12	±208	60
DLW05C-15	36~72	±15	±167	60

8W DC-DC Regulated Single and Dual Output

1.25"x 0.8"x 0.48"

- 2:1 wide input range
- 1000VDC I/O isolation
- Built-in EMI filter
- Protection: Short circuit / Overload
- Cooling by free air convection
- Five-sided shield metal case
- 100% full load burn-in test
- Low cost, high reliability
- 2 years warranty

Mechanism

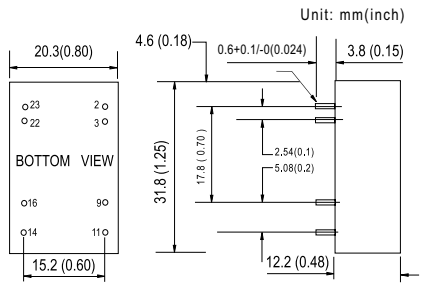

Pin Configuration

Pin No.	Output	
	Single	Dual
2&3	-Vin	-Vin
9	NC	COM
11	NC	-Vout
14	+Vout	+Vout
16	-Vout	COM
22&23	+Vin	+Vin

Voltage set point accuracy ..... ±2% (max.)
Line regulation ..... ±0.5% (max.)
Load regulation ..... ±0.5% (max.)@20~100% load
Efficiency .....81% (typical)
Short circuit protection .....continuous, auto-recovery
Overload protection ..... 110~250%, auto-recovery
I/O isolation voltage ..... 1000VDC (min.)
I/O isolation resistance ..... 100MΩ (min.)@ 500VDC
Isolation capacitance ..... 250pF (max.)
Working temperature .....-25°C to +60°C (no derating), +71°C@80% load
Storage temperature .....-25°C to +105°C
Temp. Coefficient .....±0.03% / °C (max.)
Case material ..... Five-sided shield metal case
EMI ..... Compliance to EN55022 Class B, FCC part15 Class B

❖ Single Output

Model No.	Input (VDC)	Output (VDC)	Current (mA)	R&N (mVp-p)
SCW08A-05	9~18	5	1600	50
SCW08A-12	9~18	12	670	60
SCW08A-15	9~18	15	533	60
SCW08B-05	18~36	5	1600	50
SCW08B-12	18~36	12	670	60
SCW08B-15	18~36	15	533	60
SCW08C-05	36~72	5	1600	50
SCW08C-12	36~72	12	670	60
SCW08C-15	36~72	15	533	60

❖ Dual Output

Model No.	Input (VDC)	Output (VDC)	Current (mA)	R&N (mVp-p)
DCW08A-05	9~18	±5	±800	50
DCW08A-12	9~18	±12	±335	60
DCW08A-15	9~18	±15	±267	60
DCW08B-05	18~36	±5	±800	50
DCW08B-12	18~36	±12	±335	60
DCW08B-15	18~36	±15	±267	60
DCW08C-05	36~72	±5	±800	50
DCW08C-12	36~72	±12	±335	60
DCW08C-15	36~72	±15	±267	60

DC/DC Converter

10~12W Module Type

10W DC-DC Regulated Single and Dual Output

2"x 1"x 0.44"

- 2:1 wide input range
- 4:1 wide input range(option)
- 1000VDC I/O isolation
- 3000VDC I/O isolation (option)
- Built-in EMI filter
- Protection: Short circuit / Overload
- Cooling by free air convection
- Six-sided shield metal case
- 100% full load burn-in test
- Low cost, high reliability
- 2 years warranty

Mechanism

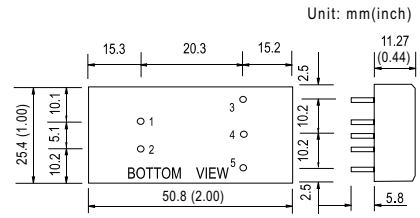

Pin Configuration

Pin No.	Output	
	Single	Dual
1	+Vin	+Vin
2	-Vin	-Vin
3	+Vout	+Vout
4	No Pin	COM
5	-Vout	-Vout

Voltage set point accuracy ...±2% (max.)
Line regulation ..... ±0.3% (max.)
Load regulation ..... ±0.5% (max.)@10~100% load
Efficiency .....85% (typical)
Short circuit protection .....continuous, auto-recovery
Overload protection ..... 160~250%, auto-recovery
I/O isolation voltage .....1000VDC (min.)
I/O isolation resistance .....100MΩ (min.)@ 500VDC
Working temperature .....-25°C to +60°C (no derating), +71°C@80% load
Storage temperature ..... -25°C to +105°C
Temp. Coefficient .....±0.03% / °C (max.)
Case material .....Six-sided shield metal case
EMI ..... Compliance to EN55022 Class B, FCC part15 Class B

❖ Single Output

Model No.	Input (VDC)	Output (VDC)	Current (mA)	R&N (mVp-p)
SKE10A-05	9~18	5	2000	50
SKE10A-12	9~18	12	840	60
SKE10A-15	9~18	15	666	60
SKE10A-24	9~18	24	420	80
SKE10B-05	18~36	5	2000	50
SKE10B-12	18~36	12	840	60
SKE10B-15	18~36	15	666	60
SKE10B-24	18~36	24	420	80
SKE10C-05	36~72	5	2000	50
SKE10C-12	36~72	12	840	60
SKE10C-15	36~72	15	666	60
SKE10C-24	36~72	24	420	80

❖ Dual Output

Model No.	Input (VDC)	Output (VDC)	Current (mA)	R&N (mVp-p)
DKE10A-05	9~18	±5	±1000	50
DKE10A-12	9~18	±12	±420	60
DKE10A-15	9~18	±15	±333	60
DKE10A-24	9~18	±24	±210	80
DKE10B-05	18~36	±5	±1000	50
DKE10B-12	18~36	±12	±420	60
DKE10B-15	18~36	±15	±333	60
DKE10B-24	18~36	±24	±210	80
DKE10C-05	36~72	±5	±1000	50
DKE10C-12	36~72	±12	±420	60
DKE10C-15	36~72	±15	±333	60
DKE10C-24	36~72	±24	±210	80

12W DC-DC Regulated Single and Dual Output

1.25"x 0.8"x 0.48"

- 2:1 wide input range
- 1500VDC I/O isolation
- Built-in remote ON/OFF control
- Built-in EMI filter
- Protection: Short circuit / Overload
- Cooling by free air convection
- Five-sided shield metal case
- 100% full load burn-in test
- Low cost, high reliability
- Modified models available: output 2.5V / 3.3V
- 2 years warranty

Mechanism

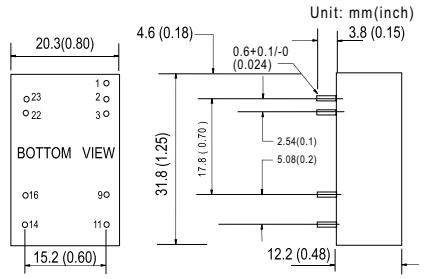

Pin Configuration

Pin No.	Output	
	Single	Dual
1	R.C	R.C
2&3	-Vin	-Vin
9	NC	COM
11	NC	-Vout
14	+Vout	+Vout
16	-Vout	COM
22&23	+Vin	+Vin

Voltage set point accuracy ...±2% (max.)
Line regulation ..... ±0.5% (max.)
Load regulation ..... ±0.5% (max.)@20~100% load
Efficiency .....83% (typical)
Short circuit protection .....continuous, auto-recovery
Overload protection ..... 110~180%, auto-recovery
I/O isolation voltage .....1500VDC (min.)
I/O isolation resistance .....100MΩ (min.)@ 500VDC
Working temperature .....-25°C to +60°C (no derating), +71°C@60% load
Storage temperature ..... -25°C to +105°C
Temp. Coefficient .....±0.03% / °C (max.)
Case material .....Five-sided shield metal case
EMI ..... Compliance to EN55022 Class A, FCC part15 Class A

❖ Single Output

Model No.	Input (VDC)	Output (VDC)	Current (mA)	R&N (mVp-p)
SCW12A-05	9~18	5	2400	50
SCW12A-12	9~18	12	1000	60
SCW12A-15	9~18	15	800	60
SCW12B-05	18~36	5	2400	50
SCW12B-12	18~36	12	1000	60
SCW12B-15	18~36	15	800	60
SCW12C-05	36~72	5	2400	50
SCW12C-12	36~72	12	1000	60
SCW12C-15	36~72	15	800	60

❖ Dual Output

Model No.	Input (VDC)	Output (VDC)	Current (mA)	R&N (mVp-p)
DCW12A-05	9~18	±5	±1200	50
DCW12A-12	9~18	±12	±500	60
DCW12A-15	9~18	±15	±400	60
DCW12B-05	18~36	±5	±1200	50
DCW12B-12	18~36	±12	±500	60
DCW12B-15	18~36	±15	±400	60
DCW12C-05	36~72	±5	±1200	50
DCW12C-12	36~72	±12	±500	60
DCW12C-15	36~72	±15	±400	60

DC/DC Converter

15W Module Type

15W DC-DC Regulated Single and Dual Output

2"x 1"x 0.44"

- 2:1 wide input range
- 4:1 wide input range(option)
- 1000VDC I/O isolation
- 3000VDC I/O isolation (option)
- Built-in EMI filter
- Protection: Short circuit / Overload
- Cooling by free air convection
- Six-sided shield metal case
- 100% full load burn-in test
- Low cost, high reliability
- 2 years warranty

Mechanism

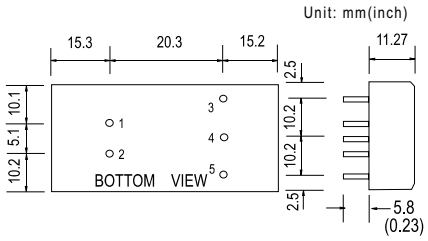

Pin Configuration

Pin No.	Output	
	Single	Dual
1	+Vin	+Vin
2	-Vin	-Vin
3	+Vout	+Vout
4	No Pin	COM
5	-Vout	-Vout

Voltage set point accuracy ... ±2% (max.)
Line regulation ..... ±0.2% (max.)
Load regulation ..... ±0.5% (max.)@10~100% load
Efficiency ..... 82% (typical)
Short circuit protection .....continuous, auto-recovery
Overload protection ..... 110~250%, auto-recovery
I/O isolation voltage .....1000VDC (min.)
I/O isolation resistance ..... 100MΩ (min.)@ 500VDC
Working temperature .....-25°C to +60°C (no derating), +71°C@80% load
Storage temperature ..... -25°C to +105°C
Temp. Coefficient ..... ±0.03% / °C (max.)
Case material ..... Six-sided shield metal case
EMI .....Compliance to EN55022 Class B, FCC part15 Class B

❖ Single Output

Model No.	Input (VDC)	Output (VDC)	Current (mA)	R&N (mVp-p)
SKA15A-033	9~18	3.3	3000	50
SKA15A-05	9~18	5	3000	50
SKA15A-12	9~18	12	1250	60
SKA15A-15	9~18	15	1000	60
SKA15B-033	18~36	3.3	3000	50
SKA15B-05	18~36	5	3000	50
SKA15B-12	18~36	12	1250	60
SKA15B-15	18~36	15	1000	60
SKA15C-033	36~72	3.3	3000	50
SKA15C-05	36~72	5	3000	50
SKA15C-12	36~72	12	1250	60
SKA15C-15	36~72	15	1000	60

❖ Dual Output

Model No.	Input (VDC)	Output (VDC)	Current (mA)	R&N (mVp-p)
DKA15A-05	9~18	±5	±1500	50
DKA15A-12	9~18	±12	±625	60
DKA15A-15	9~18	±15	±500	60
DKA15B-05	18~36	±5	±1500	50
DKA15B-12	18~36	±12	±625	60
DKA15B-15	18~36	±15	±500	60
DKA15C-05	36~72	±5	±1500	50
DKA15C-12	36~72	±12	±625	60
DKA15C-15	36~72	±15	±500	60

15W DC-DC Regulated Single and Dual Output

2"x 2"x 0.43"

- 2:1 wide input range
- 4:1 wide input range(option)
- 1000VDC I/O isolation
- 3000VDC I/O isolation(option)
- Built-in EMI filter
- Protections: Short circuit / Overload
- Cooling by free air convection
- Six-sided shield metal case
- 100% full load burn-in test
- Low cost, high reliability
- 2 years warranty

Mechanism

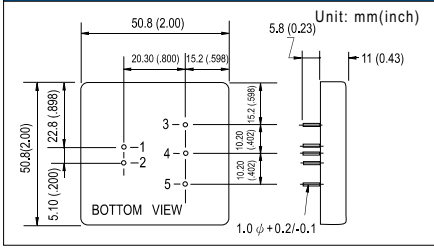

Pin Configuration

Pin No.	Output	
	Single	Dual
1	+Vin	+Vin
2	-Vin	-Vin
3	+Vout	+Vout
4	No Pin	COM
5	-Vout	-Vout

Voltage set point accuracy ...±2% (max.)
Line regulation ..... ±0.3% (max.)
Load regulation ..... ±0.5% (max.)@10~100% load
Efficiency ..... 85% (typical)
Short circuit protection ..... continuous, auto-recovery
Overload protection .....160~250%, auto-recovery
I/O isolation voltage ..... 1000VDC (min.)
I/O isolation resistance ..... 100MΩ (min.)@ 500VDC
Working temperature .....-25°C to +60°C (no derating), +71°C@80% load
Storage temperature ..... -25°C to +105°C
Temp. Coefficient .....±0.03% / °C (max.)
Case material ..... Six-sided shield metal case
EMI .....Compliance to EN55022 Class B, FCC part15 Class B

❖ Single Output

Model No.	Input (VDC)	Output (VDC)	Current (mA)	R&N (mVp-p)
SKE15A-05	9~18	5	3000	50
SKE15A-12	9~18	12	1250	60
SKE15A-15	9~18	15	1000	60
SKE15A-24	9~18	24	625	80
SKE15B-05	18~36	5	3000	50
SKE15B-12	18~36	12	1250	60
SKE15B-15	18~36	15	1000	60
SKE15B-24	18~36	24	625	80
SKE15C-05	36~72	5	3000	50
SKE15C-12	36~72	12	1250	60
SKE15C-15	36~72	15	1000	60
SKE15C-24	36~72	24	625	80

❖ Dual Output

Model No.	Input (VDC)	Output (VDC)	Current (mA)	R&N (mVp-p)
DKE15A-05	9~18	±5	±1500	50
DKE15A-12	9~18	±12	±625	60
DKE15A-15	9~18	±15	±500	60
DKE15A-24	9~18	±24	±313	80
DKE15B-05	18~36	±5	±1500	50
DKE15B-12	18~36	±12	±625	60
DKE15B-15	18~36	±15	±500	60
DKE15B-24	18~36	±24	±313	80
DKE15C-05	36~72	±5	±1500	50
DKE15C-12	36~72	±12	±625	60
DKE15C-15	36~72	±15	±500	60
DKE15C-24	36~72	±24	±313	80

DC/DC Converter

25~30W Module Type

25~30W DC-DC Regulated Dual and Triple Output

- 2:1 wide input range
- 4:1 wide input range(option)
- 1000VDC I/O isolation
- Built-in remote ON/OFF control
- Built-in EMI filter
- Trimming output (±10%) for dual output
- Protections: Short circuit / Overload
- Cooling by free air convection
- Six-sided shield metal case
- 100% full load burn-in test
- Low cost, high reliability
- 2 years warranty

Mechanism

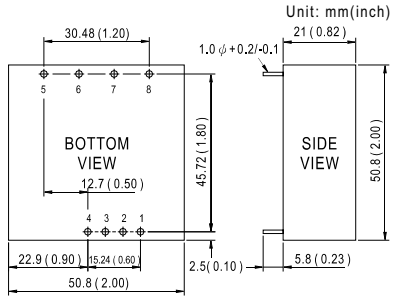

Pin Configuration

Pin No.	Output	
	Dual	Triple
1	R.C	R.C
2	No Pin	No Pin
3	-Vin	-Vin
4	+Vin	+Vin
5	+Vout	+Vout
6	COM	+5V
7	-Vout	COM
8	TRIM	-Vout

Voltage set point accuracy .... ±2% (max.)
Line regulation ..... ±0.5% (max.) for dual output;
±1% (max.) for triple output
Load regulation ..... ±0.5% (10%~full load)(Dual)
±5% (20%~full load)(Triple)
Efficiency ..... 83% (typical)
Short circuit protection ..... continuous, auto-recovery
Overload protection ..... 110~250%, auto-recovery
I/O isolation voltage ..... 1000VDC (min.)
I/O isolation resistance ..... 100MΩ (min.)@ 500VDC
Working temperature ..... -25°C to +71°C (no derating), +85°C@60% load
Storage temperature ..... -40°C to +105°C
Temp. Coefficient ..... ±0.03% / °C (max.)
Case material ..... Six-sided shield metal case
EMI ..... Compliance to EN55022 Class B,
FCC part15 Class B

❖ Dual Output

Model No.	Input (VDC)	Output (VDC)	Current (mA)	R&N (mVp-p)
DKA30A-05	9~18	±5	±2500	100
DKA30A-12	9~18	±12	±1250	100
DKA30A-15	9~18	±15	±1000	100
DKA30B-05	18~36	±5	±2500	100
DKA30B-12	18~36	±12	±1250	100
DKA30B-15	18~36	±15	±1000	100
DKA30C-05	36~72	±5	±2500	100
DKA30C-12	36~72	±12	±1250	100
DKA30C-15	36~72	±15	±1000	100

❖ Triple Output

Model No.	Input (VDC)	Output (VDC)	Current (mA)	R&N (mVp-p)
TKA30A-B	9~18	+5 / ±12	3500 / ±310	100
TKA30A-C	9~18	+5 / ±15	3500 / ±250	100
TKA30B-B	18~36	+5 / ±12	3500 / ±310	100
TKA30B-C	18~36	+5 / ±15	3500 / ±250	100
TKA30C-B	36~72	+5 / ±12	3500 / ±310	100
TKA30C-C	36~72	+5 / ±15	3500 / ±250	100

30W DC-DC Regulated Single Output

- 2:1 wide input range
- 1000VDC I/O isolation
- Built-in remote ON/OFF control
- Built-in EMI filter
- Trimming output (±10%)
- Protections: Short circuit / Overload / Over voltage
- Cooling by free air convection
- Compact size, high efficiency
- 100% full load burn-in test
- Low cost, high reliability
- 2 years warranty

Mechanism

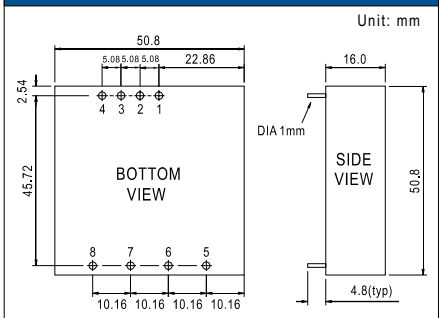

Pin Configuration

Pin No.	Output
1	+Vin
2	-Vin
3	No Pin
4	Control ON/OFF
5	No Pin
6	+Vout
7	-Vout
8	TRIM

Voltage set point accuracy ...±2% (max.)(±3% for 3.3VDC models)
Line regulation ..... ±1% (max.)
Load regulation ..... ±1% (max.) @10%~full load
Overload protection ..... Over 105% power limiting, auto-recovery
Over voltage protection ..... 115~150% rated output voltage
Efficiency (typical) ..... 80% for 12V input
83% for 24V input
85% for 48V input
I/O isolation voltage ..... 1000VDC(min.)
I/O isolation resistance ..... 100MΩ(min.) @500VDC
Working temperature ..... -25°C to +85°C(refer to output derating curve)
Storage temperature ..... -25°C to 85°C
Safety standards ..... Design refer to UL1950, TUV EN60950
Case Material ..... Six-sided shield metal case
EMI ..... Compliance to EN55022 class B
Packing ..... 0.1kg ; 150pcs / 15.8kg / 0.97CUFT

Model No.	Input (VDC)	Output (VDC)	Current (A)	R&N (mVp-p)
SDM30-12S3	9~18	3.3	5.0	75
SDM30-12S5	9~18	5	5.0	75
SDM30-12S12	9~18	12	2.1	100
SDM30-12S15	9~18	15	1.7	100
SDM30-24S3	18~36	3.3	5.0	75
SDM30-24S5	18~36	5	5.0	75
SDM30-24S12	18~36	12	2.5	100
SDM30-24S15	18~36	15	2.0	100
SDM30-48S3	36~72	3.3	5.0	75
SDM30-48S5	36~72	5	5.0	75
SDM30-48S12	36~72	12	2.5	100
SDM30-48S15	36~72	15	2.0	100

DC/DC Converter

5~10W On Board Type

5W DC-DC Regulated Single Output

1.6"x 1"x 0.327"

- 4:1 wide input range
- 1000VDC I/O isolation
- Built-in EMI filter
- Protections: Short circuit / Overload / Over voltage
- Built-in remote ON/OFF control
- Cooling by free air convection
- 100% full load burn-in test
- Low cost, high reliability
- 2 years warranty

Mechanism

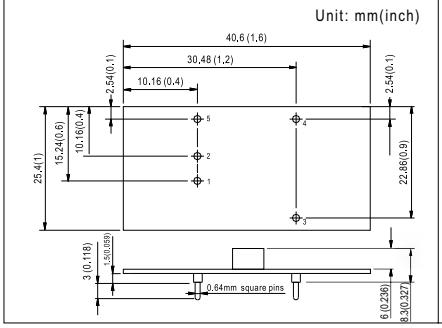

Pin Configuration

Pin No.	Output
1	+INPUT
2	-INPUT(GND)
3	+Vout
4	-Vout
5	CONTROL

Voltage set point accuracy ... ±2.0% (max.)
Line regulation ..... ±1.0% (max.)
Load regulation ..... ±1~±2% (max.)@10%~full load
Efficiency .....85% (typical)
Short circuit protection .....continuous, auto-recovery
Overload protection ..... over 105% power limiting, auto-recovery
I/O isolation voltage 1000VDC
I/O isolation resistance .....100MΩ (min.)@ 500VDC, 25°C 70% RH
Working temperature .....-25°C to +70°C (refer to output derating curve)
Storage temperature ..... -40°C to +85°C
Temp. Coefficient .....±0.03% / °C (0~60°C)
Safety standards .....IEC60950-1 CB approved by TUV
EMC standards .....EN55022 Class B, EN61000-4-2,3,4,5,6,8
Packing .....0.007kg ; 700pcs / 5.9kg / 0.97CUFT

Model No.	Input (VDC)	Output (VDC)	Current (mA)	R&N (mVp-p)
NSD05-12S3	9.2~36	3.3	1200	75
NSD05-12S5	9.2~36	5	1000	75
NSD05-12S12	9.2~36	12	420	75
NSD05-12S15	9.2~36	15	330	75
NSD05-48S3	18~72	3.3	1200	75
NSD05-48S5	18~72	5	1000	75
NSD05-48S12	18~72	12	420	75
NSD05-48S15	18~72	15	330	75

We prvide specification, drawing, test report and more information, please visit our website —
http://www.meanwell.com

48hrs delivery—
We keep enough stock for 95% of standard models at our 2400m² warehouse. We can arrange prompt delivery within 48hrs.

10W DC-DC Regulated Single and Dual Output

2"x 1"x 0.394"

- 4:1 wide input range
- 1000VDC I/O isolation
- Protections: Short circuit / Overload / Over voltage
- Built-in EMI filter
- Built-in remote ON/OFF control
- Cooling by free air convection
- 100% full load burn-in test
- Low cost, high reliability
- 2 years warranty

Mechanism

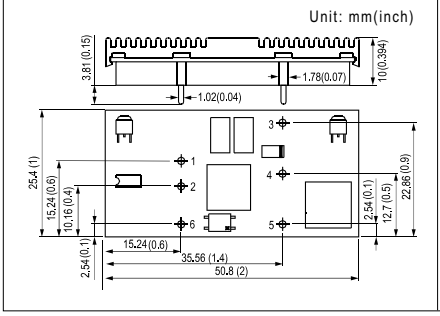

Pin Configuration

Pin No.	Output	
	Single	Dual
1	+INPUT	+INPUT
2	-INPUT (GND)	-INPUT (GND)
3	+OUT	+OUT
4	NC	COMMON
5	-OUT	-OUT
6	CONTROL	CONTROL

Voltage set point accuracy ..... ±2% (max.)
Line regulation ..... ±1% @10%~full load
Load regulation ..... ±1~±3% @10%~full load
Efficiency ..... 80% (typical)
Short circuit protection ..... continuous, auto-recovery
Over voltage protection .....clamp@115~150%
Shutdown idle current 20mA
I/O isolation voltage 1000VDC
I/O isolation resistance ..... 100MΩ(min.) @500VDC
Working temperature ..... -25~+70°C
Storage temperature ..... -40~+85°C
Temp. coefficient ..... ±0.03% / °C(0~60°C)
Safety standards ..... UL60950-1 approved
EMC standards ..... EN55022 Class B, EN61000-4-2,3,4,6,8
Packing ..... 0.02kg ; 300pcs / 7.0kg / 0.97CUFT

❖ Single Output

Model No.	Input (VDC)	Output (VDC)	Current (mA)	R&N (mVp-p)
NSD10-12S3	9.8~36	3.3	2500	75
NSD10-12S5	9.8~36	5	2000	75
NSD10-12S9	9.8~36	9	1100	75
NSD10-12S12	9.8~36	12	830	75
NSD10-12S15	9.8~36	15	670	75
NSD10-48S3	22~72	3.3	2500	75
NSD10-48S5	22~72	5	2000	75
NSD10-48S9	22~72	9	1100	75
NSD10-48S12	22~72	12	830	75
NSD10-48S15	22~72	15	670	75

❖ Dual Output

Model No.	Input (VDC)	Output (VDC)	Current (mA)	R&N (mVp-p)
NSD10-12D5	9.8~36	±5	±50~1000	75
NSD10-12D12	9.8~36	±12	±20~420	75
NSD10-12D15	9.8~36	±15	±16~330	75
NSD10-48D5	22~72	±5	±50~1000	75
NSD10-48D12	22~72	±12	±20~420	75
NSD10-48D15	22~72	±15	±16~330	75

DC/DC Converter

15~60W On Board Type

15W DC-DC Regulated Single and Dual Output

2"x 1.5"x 0.387"

- 4:1 wide input range
- 1500VDC I/O isolation
- Protections: Short circuit / Overload / Over voltage
- Built-in EMI filter
- Output voltage trimming function
- Built-in remote ON/OFF control
- Cooling by free air convection
- 100% full load burn-in test
- Low cost, high reliability
- 2 years warranty

Mechanism

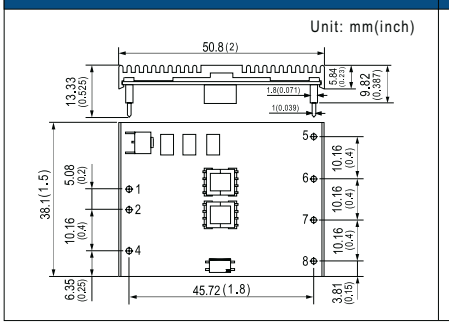

Pin Configuration

Pin No.	Output	
	Single	Dual
1	+Vin	+Vin
2	-Vin	-Vin
3	No Pin	No Pin
4	CONTROL	CONTROL
5	No Pin	+Vout
6	+Vout	COMMON
7	-Vout	-Vout
8	TRIM	TRIM

Voltage set point accuracy ..... ±2% (max.)
Line regulation ..... ±1% @10%~full load
Load regulation ..... ±1~±3% @10%~full load
Efficiency ..... 85% (typical)
Short circuit protection ..... continuous, auto-recovery
Over voltage protection ..... clamp@115~150%
Shutdown idle current 20mA
I/O isolation voltage 1500VDC
I/O isolation resistance ..... 100MΩ(min.) @500VDC
Working temperature ..... -25~+70°C
Storage temperature ..... -40~+85°C
Temp. coefficient ..... ±0.03% / °C(0~50°C)
Safety standards ..... UL60950-1 approved
EMC standards ..... EN55022 Class B, EN61000-4-2,3,4,6,8
Packing ..... 0.03kg ; 180pcs / 6.4kg / 0.97CUFT

❖ Single Output

Model No.	Input (VDC)	Output (VDC)	Current (mA)	R&N (mVp-p)
NSD15-12S3	9.4~36	3.3	3750	100
NSD15-12S5	9.4~36	5	3000	75
NSD15-12S12	9.4~36	12	1250	75
NSD15-12S15	9.4~36	15	1000	75
NSD15-48S3	18~72	3.3	3750	100
NSD15-48S5	18~72	5	3000	75
NSD15-48S12	18~72	12	1250	75
NSD15-48S15	18~72	15	1000	75

❖ Dual Output

Model No.	Input (VDC)	Output (VDC)	Current (mA)	R&N (mVp-p)
NSD15-12D5	9.4~36	±5	±70~1500	100
NSD15-12D12	9.4~36	±12	±30~620	100
NSD15-12D15	9.4~36	±15	±20~500	100
NSD15-48D5	18~72	±5	±70~1500	100
NSD15-48D12	18~72	±12	±30~620	100
NSD15-48D15	18~72	±15	±20~500	100

12.5~60W Single Output Non-isolated DC-DC Converter

- Non-isolated, fix-frequency at 250kHz
- 3:1 wide input range for 5~15V output
- ±2% output voltage accuracy
- High efficiency up to 96%
- Built-in remote ON/OFF control
- Compact size
- Cooling by free air convection
- Economical open frame design
- Protections: Short circuit / Overload / Over voltage
- 2 years warranty

NID30
2"x 0.512"x 0.421"

NID60
2"x 1.024"x 0.421"

❖ NID30 Series

Mechanism

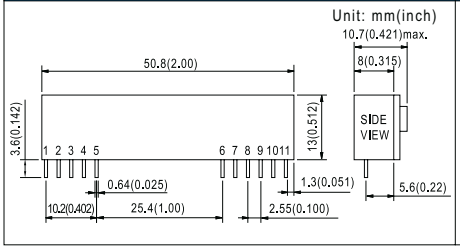

Pin Configuration

Pin No.	Output
1,2,3,4	+Vout
5,6	COM
7,8	+Vin
9,10	N.C.
11	R.C.

❖ NID60 Series

Mechanism

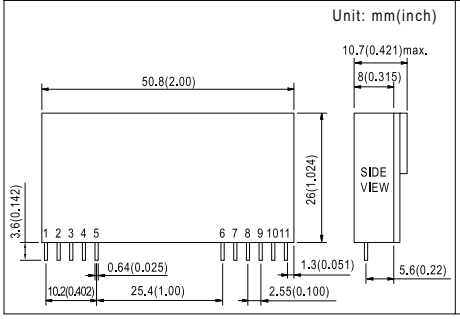

Pin Configuration

Pin No.	Output
1,2,3,4	+Vout
5,6	COM
7,8	+Vin
9,10	N.C.
11	R.C.

Voltage set point accuracy ..... ±2% (max.)
Line regulation ..... ±0.5%
Load regulation ..... ±0.5% @ 10~100% load
Efficiency ..... 96% (typical)
Short circuit protection ..... Continuous, auto-recovery
Overload protection ..... 120%~300%, auto-recovery
Over voltage protection ..... Clamp by TVS Diode
Working temperature ..... -25~+65°C (refer to derating curve)
Storage temperature ..... -25~+105°C
Temp. coefficient ..... ±0.03% / °C(0~50°C)

❖ NID30 Series

Model No.	Input	Output	R&N	Effi
NID30S24-05	20~53V	5V, 0~2.50A	100mV	91%
NID30S24-12	20~53V	12V, 0~2.50A	120mV	95%
NID30S24-15	20~53V	15V, 0~2.00A	150mV	96%
NID30S48-24	30~53V	24V, 0~1.25A	200mV	93%

❖ NID60 Series

Model No.	Input	Output	R&N	Effi
NID60S24-05	20~53V	5V, 0~4.0A	100mV	90%
NID60S24-12	20~53V	12V, 0~4.0A	120mV	96%
NID60S24-15	20~53V	15V, 0~4.0A	150mV	96%
NID60S48-24	30~53V	24V, 0~2.5A	200mV	95%

DC/DC Converter

5~45W PCB Type

5W Single Output DC-DC Converter

- 2:1 wide input range
- 2000VAC I/O isolation
- Protections: Short circuit / Overload / Over voltage / Over temp.
- Built-in EMI filter, low ripple noise
- 100% full load burn-in test
- Low cost, high reliability
- 2 years warranty

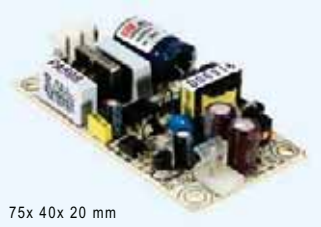

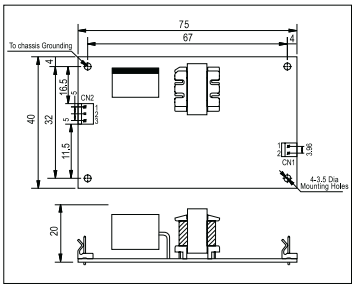

Line and load regulation ... ±1.0% (max.)
Overload protection ..... >105% fold back current limiting, auto-recovery
Over voltage protection .... 115%~135% rated output voltage
Withstand voltage ..... I/P-O/P: 2kVAC, I/P-FG: 1.5kVAC, 1 minute
Isolation resistance ..... 100MΩ(min.) @500VDC
Working temperature ..... -10°C to +60°C (refer to output derating curve)
Safety standards ..... Meet LVD
EMC standards ..... EN55022 class B, EN61000-4-2,3,4,6,8, ENV50204
Connection ..... 3P, 2P / 3.96mm pitch, Molex 5285-03, 5273-02
Packing .....0.05kg ; 120pcs / 6.25kg / 1.0CUFT

Model No.	Input	Output	R&N	Effi.
PSD-05-5	36~72V	5V, 0~1.0A	50mV	75%
PSD-05-12	36~72V	12V, 0~0.45A	100mV	78%
PSD-05-24	36~72V	24V, 0~0.22A	150mV	78%

15W Single Output DC-DC Converter

- 2:1 wide input range
- 2000VAC I/O isolation
- Protections: Short circuit / Overload / Over voltage / Over temp.
- Built-in EMI filter, low ripple noise
- 100% full load burn-in test
- Low cost, high reliability
- 2 years warranty

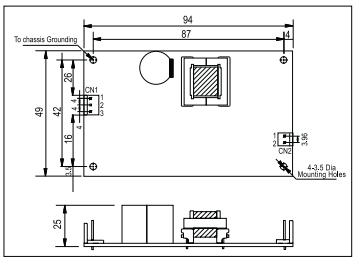

Line and load regulation .... ±1.0% (max.)
Overload protection ..... 105%~150% hiccup mode, auto-recovery
Over voltage protection ..... 115%~135% rated output voltage
Withstand voltage ..... I/P-O/P: 2kVAC, I/P-FG: 1.5kVAC, 1 minute
Isolation resistance ..... 100MΩ(min.) @500VDC
Working temperature ..... -10°C to +60°C (refer to output derating curve)
Safety standards ..... Meet LVD
EMC standards ..... EN55022 class B, EN61000-4-2,3,4,6,8, ENV50204
Connection ..... 3P, 2P / 3.96mm pitch, JST B3P/B2P-VH
Packing ..... 0.081kg ; 120pcs / 10.72kg

Model No.	Input	Output	R&N	Effi.
PSD-15A-5	9.2~18V	5V, 0~3.0A	50mV	74%
PSD-15A-12	9.2~18V	12V, 0~1.25A	100mV	67%
PSD-15A-24	9.2~18V	24V, 0~0.6A	100mV	72%
PSD-15B-5	18~36V	5V, 0~3.0A	50mV	78%
PSD-15B-12	18~36V	12V, 0~1.25A	100mV	78%
PSD-15B-24	18~36V	24V, 0~0.6A	100mV	78%
PSD-15C-5	36~72V	5V, 0~3.0A	50mV	78%
PSD-15C-12	36~72V	12V, 0~1.25A	100mV	78%
PSD-15C-24	36~72V	24V, 0~0.6A	100mV	79%

30W Single Output DC-DC Converter

- 2:1 wide input range
- Protections:Short circuit / Overload / Over voltage / Reverse polarity
- 1500VAC I/O isolation
- Cooling by free air convection
- Built-in EMI filter, low ripple noise
- 100% full load burn-in test
- Low cost, high reliability
- 2 years warranty

DC adjustment range ..... 5V: 4.5~5.5V, 12V: 11~13.5V, 24V: 22~26V
Line and load regulation .. ±1% (max.)
Overload protection ..... 105%~150% fold back current limiting, auto-recovery
Over voltage protection ... 115%~135% rated output voltage
Withstand voltage ..... I/P-O/P: 1.5kVAC, I/P-FG: 1.5kVAC, 1 minute
Working temperature ..... -20~60°C (refer to output derating curve)
EMC standards ..... EN55022 class B, EN61000-4-2,3,4,6,8, EN55024
Connection ..... 3P, 4P / 3.96mm pitch, JST B3P/B4P-VH-B

Model No.	Input	Output	R&N	Effi.
PSD-30A-05	9~18V	5V, 0~5.0A	100mV	77%
PSD-30A-12	9~18V	12V, 0~2.5A	120mV	76%
PSD-30A-24	9~18V	24V, 0~1.25A	150mV	80%
PSD-30B-05	18~36V	5V, 0~5.0A	100mV	80%
PSD-30B-12	18~36V	12V, 0~2.5A	120mV	80%
PSD-30B-24	18~36V	24V, 0~1.25A	150mV	84%
PSD-30C-05	36~72V	5V, 0~5.0A	100mV	82%
PSD-30C-12	36~72V	12V, 0~2.5A	120mV	82%
PSD-30C-24	36~72V	24V, 0~1.25A	150mV	84%

45W Single Output DC-DC Converter

- 2:1 wide input range
- Protections:Short circuit / Overload / Over voltage / Reverse polarity
- Cooling by free air convection
- Built-in EMI filter, low ripple noise
- 100% full load burn-in test
- Fixed switching frequency at 96kHz
- Low cost
- 2 years warranty

DC adjustment range .....5V: 4.5~5.5V, 12V: 10.8~13.2V, 24V: 21.6~26.4V
Line and load regulation .... ±1% (max.)
Overload protection ..... 105%~160% shut down, re-power on to recover
Over voltage protection ..... 115%~135% rated output voltage
Withstand voltage ..... I/P-O/P: 1.5kVAC, I/P-FG: 1.5kVAC, 1 minute
Working temperature .....-10~60°C(refer to output derating curve)
Safety standards .....EN60950-1 CB approved by TUV
EMC standards ..... EN55022 class B, EN61000-4-2,3,4,6,8, EN55024
Connection .....2P, 6P / 3.96mm pitch, Molex 5277-02, 5273-06
Packing ..... 0.19kg ; 72pcs / 15.6kg / 1.35CUFT

Model No.	Input	Output	R&N	Effi.
PSD-45A-05	9.2~18V	5V, 0~6.0A	100mV	74%
PSD-45A-12	9.2~18V	12V, 0~2.5A	120mV	79%
PSD-45A-24	9.2~18V	24V, 0~1.25A	150mV	80%
PSD-45B-05	18~36V	5V, 0~9.0A	100mV	77%
PSD-45B-12	18~36V	12V, 0~3.75A	120mV	82%
PSD-45B-24	18~36V	24V, 0~1.875A	150mV	85%
PSD-45C-05	37~72V	5V, 0~9.0A	100mV	80%
PSD-45C-12	37~72V	12V, 0~3.75A	120mV	83%
PSD-45C-24	37~72V	24V, 0~1.875A	150mV	86%

DC/DC Converter 15~50W Enclosed Single Output

15W Single Output DC-DC Converter

CASE: 931 78x 51x 28 mm

- 2:1 wide input range
- 2000VAC I/O isolation
- Cooling by free air convection
- Protections: Short circuit / Over load / Over voltage
- Built-in EMI filter, low ripple noise
- 100% full load burn-in test
- Low cost, high reliability
- 2 years warranty

DC adjustment range .....5V: 4.75~5.5V, 12V: 10.8~13.2V, 24V: 21.6~26.4V
Line and load regulation .... ±0.5% (max.)
Overload protection ..... 105%~160% hiccup mode, auto-recovery
Over voltage protection ..... 115%~135% rated output voltage
Withstand voltage ..... I/P-O/P: 2kVAC, I/P-FG: 1.5kVAC, 1 minute
Working temperature .....0~40°C@100%, -10°C@80%, 60°C@60% load
Safety standard ..... Meet LVD
EMC standards ..... EN55022 class B, EN61000-4-2,3,4,6,8, ENV50204
Packing ..... 0.18kg ; 60pcs / 11.8kg

Model No.	Input	Output	R&N	Effi.
SD-15A-5	9.2~18V	5V, 0~3.0A	100mV	68%
SD-15A-12	9.2~18V	12V, 0~1.25A	120mV	72%
SD-15A-24	9.2~18V	24V, 0~0.625A	150mV	70%
SD-15B-5	18~36V	5V, 0~3.0A	100mV	76%
SD-15B-12	18~36V	12V, 0~1.25A	120mV	76%
SD-15B-24	18~36V	24V, 0~0.625A	150mV	77%
SD-15C-5	36~72V	5V, 0~3.0A	100mV	75%
SD-15C-12	36~72V	12V, 0~1.25A	120mV	79%
SD-15C-24	36~72V	24V, 0~0.625A	150mV	78%

25W Single Output DC-DC Converter

CASE: 905 99x 97x 36 mm

- 2:1 wide input range
- 1500VAC I/O isolation
- Protections: Short circuit / Overload / Over voltage
- Built-in EMI filter, low ripple noise
- 100% full load burn-in test
- Low cost, high reliability
- 2 years warranty

DC adjustment range ..... 5V: 4.5~5.5V, 12V: 11~16V, 24V: 23~30V
Line and load regulation .... ±0.5% (max.)
Overload protection ..... 105%~150% fold back current limiting, auto-recovery
Over voltage protection ..... 115%~165% rated output voltage
Withstand voltage ..... I/P-O/P: 2kVAC, I/P-FG: 1.5kVAC, 1 minute
Isolation resistance .....100MΩ(min.) @500VDC
Working temperature .....-10°C to +60°C (refer to output derating curve)
Safety standards ..... Meet LVD
EMC standards ..... EN55022 class B, EN61000-4-2,3,4,6,8, ENV50204
Packing .....0.38kg ; 45pcs / 17.8kg / 0.9CUFT

Model No.	Input	Output	R&N	Effi.
SD-25A-5	9.2~18V	5V, 0~5.0A	100mV	71%
SD-25A-12	9.2~18V	12V, 0~2.1A	120mV	72%
SD-25A-24	9.2~18V	24V, 0~1.1A	150mV	75%
SD-25B-5	19~36V	5V, 0~5.0A	100mV	72%
SD-25B-12	19~36V	12V, 0~2.1A	120mV	75%
SD-25B-24	19~36V	24V, 0~1.1A	150mV	78%
SD-25C-5	36~72V	5V, 0~5.0A	100mV	74%
SD-25C-12	36~72V	12V, 0~2.1A	120mV	78%
SD-25C-24	36~72V	24V, 0~1.1A	150mV	81%

50W Single Output DC-DC Converter

CASE: 901 159x 97x 38 mm

- 2:1 wide input range
- 1500VAC I/O isolation
- Protections: Short circuit / Over load / Over voltage
- Built-in EMI filter, low ripple noise
- Cooling by free air convection
- 100% full load burn-in test
- Low cost, high reliability
- 2 years warranty

DC adjustment range ..... 5V: 4.5~5.5V, 12V: 11~16V, 24V: 23~30V
Line and load regulation .... ±0.5% (max.)
Overload protection ..... 105%~150% fold back current limiting, auto-recovery
Over voltage protection .....115%~165% rated output voltage
Withstand voltage ..... I/P-O/P: 1.5kVAC, I/P-FG: 1.5kVAC, 1 minute
Isolation resistance ..... 100MΩ(min.) @500VDC
Working temperature ..... -10°C to +60°C (refer to output derating curve)
Safety standard ..... Meet LVD
EMC standards ..... EN55022 class B, EN61000-4-2,3,4,6,8, ENV50204
Packing .....0.53kg ; 24pcs / 12.7kg / 0.75CUFT

Model No.	Input	Output	R&N	Effi.
SD-50A-5	9.2~18V	5V, 0~10A	100mV	70%
SD-50A-12	9.2~18V	12V, 0~4.2A	120mV	72%
SD-50A-24	9.2~18V	24V, 0~2.1A	150mV	74%
SD-50B-5	19~36V	5V, 0~10A	100mV	73%
SD-50B-12	19~36V	12V, 0~4.2A	120mV	75%
SD-50B-24	19~36V	24V, 0~2.1A	150mV	80%
SD-50C-5	36~72V	5V, 0~10A	100mV	76%
SD-50C-12	36~72V	12V, 0~4.2A	120mV	78%
SD-50C-24	36~72V	24V, 0~2.1A	150mV	83%

DC/DC Converter

100~350W Enclosed Single Output

100W Single Output DC-DC Converter

CASE: 902 199x 98x 38 mm

- 2:1 wide input range
- 1500VAC I/O isolation
- Protections: Short circuit / Overload / Over voltage
- Built-in EMI filter, low ripple noise
- 100% full load burn-in test
- Low cost, high reliability
- 2 years warranty

DC adjustment range ..... 5V: 4.5~5.5V, 12V: 11~16V, 24V: 23~30V
Line regulation ..... ±0.5% (max.)
Load regulation ..... ±0.5% (max.)
Overload protection ..... 105%~135% fold back current limiting, auto-recovery
Over voltage protection ..... 115%~165% rated output voltage
Withstand voltage ..... I/P-O/P: 1.5kVAC, I/P-FG: 1.5kVAC, 1 minute
Isolation resistance ..... 100MΩ(min.) @500VDC
Working temperature ..... -10°C to +60°C (refer to output derating curve)
Safety standards ..... Meet LVD, EN60950-1 CB approved by TUV (D type only)
EMC standards ..... EN55022 class B, EN61000-4-2,3,4,6,8, ENV50204
Packing ..... 0.65kg ; 20pcs / 13.8kg / 0.8CUFT

Model No.	Input	Output	R&N	Effi.
SD-100B-5	19~36V	5V, 0~20A	100mV	74%
SD-100B-12	19~36V	12V, 0~8.5A	120mV	75%
SD-100B-24	19~36V	24V, 0~4.2A	150mV	78%
SD-100C-5	36~72V	5V, 0~20A	100mV	75%
SD-100C-12	36~72V	12V, 0~8.5A	120mV	77%
SD-100C-24	36~72V	24V, 0~4.2A	150mV	81%
SD-100D-5	72~144V	5V, 0~20A	100mV	76%
SD-100D-12	72~144V	12V, 0~8.5A	120mV	80%
SD-100D-24	72~144V	24V, 0~4.2A	150mV	83%

150W Single Output DC-DC Converter

CASE: 906 199x 110x 50 mm

- 2:1 wide input range
- 1500VAC I/O isolation
- Protections: Short circuit / Over load / Over voltage
- Built-in EMI filter, low ripple noise
- Cooling by free air convection
- 100% full load burn-in test
- Low cost, high reliability
- 2 years warranty

DC adjustment range ..... 12V: 11~16V, 24V: 23~30V
Line regulation ..... ±0.5% (max.)
Load regulation ..... ±0.5% (max.)
Overload protection ..... 105%~135% fold back current limiting, auto-recovery
Over voltage protection ..... 130%~165% rated output voltage
Withstand voltage ..... I/P-O/P: 1.5kVAC, I/P-FG: 1.5kVAC, 1 minute
Isolation resistance ..... 100MΩ(min.) @500VDC
Working temperature ..... -10°C ~ +60°C (refer to output derating curve)
Safety standards ..... Meet LVD, EN60950-1 CB approved by TUV (D type only)
EMC standards ..... EN55022 class B, EN61000-4-2,3,4,6,8, ENV50204
Packing ..... 0.86kg ; 16pcs / 14.5kg / 0.95CUFT

Model No.	Input	Output	R&N	Effi.
SD-150B-12	19~36V	12V, 0~12.5A	120mV	75%
SD-150B-24	19~36V	24V, 0~6.3A	150mV	77%
SD-150C-12	36~72V	12V, 0~12.5A	120mV	77%
SD-150C-24	36~72V	24V, 0~6.3A	150mV	80%
SD-150D-12	72~144V	12V, 0~12.5A	120mV	79%
SD-150D-24	72~144V	24V, 0~6.3A	150mV	82%

200W Single Output DC-DC Converter

CASE: 912B 215x 115x 50 mm

- 2:1 wide input range
- 1500VAC I/O isolation
- Protections: Short circuit / Overload / Over voltage / Over temp.
- Cooling by free air convection
- 100% full load burn-in test
- 2 years warranty

DC adjustment range ..... 5V: 4.5~5.5V, 12V: 11~16V, 24V: 23~30V, 48V: 43~53V
Voltage tolerance..... ±2% (max.)
Overload protection ..... 105%~135% shut off, re-power on to recover
Over voltage protection ..... 110%~167% rated output voltage
Withstand voltage ..... I/P-O/P: 1.5kVAC, I/P-FG: 1.5kVAC, 1 minute
Working temperature ..... -20°C to +60°C (refer to output derating curve)
Safety standards ..... Meet LVD, EN60950-1 CB approved by TUV (D type only)
EMC standards ..... EN55022 class B, EN61000-4-2,3,4,6,8, ENV50204
Packing ..... 1.1kg ; 12pcs / 14.4kg / 0.92CUFT

Model No.	Input	Output	R&N	Effi.
SD-200B-5	19~36V	5V, 0~34.0A	100mV	79%
SD-200B-12	19~36V	12V, 0~16.7A	120mV	82%
SD-200B-24	19~36V	24V, 0~8.40A	150mV	85%
SD-200B-48	19~36V	48V, 0~4.20A	200mV	86%
SD-200C-5	36~72V	5V, 0~40.0A	100mV	81%
SD-200C-12	36~72V	12V, 0~16.7A	120mV	84%
SD-200C-24	36~72V	24V, 0~8.40A	150mV	86%
SD-200C-48	36~72V	48V, 0~4.20A	200mV	86%
SD-200D-5	72~144V	5V, 0~40.0A	100mV	82%
SD-200D-12	72~144V	12V, 0~16.7A	120mV	82%
SD-200D-24	72~144V	24V, 0~8.40A	150mV	84%
SD-200D-48	72~144V	48V, 0~4.20A	200mV	90%

350W Single Output DC-DC Converter

CASE: 912A 215x 115x 50 mm

- 2:1 wide input range
- 1500VAC I/O isolation
- Protections: Short circuit / Over load / Over voltage / Over temp.
- Forced air cooling by built-in DC fan
- 100% full load burn-in test
- 2 years warranty

DC adjustment range ..... 5V: 4.5~5.5V, 12V: 11~16V, 24V: 23~30V, 48V: 43~53V
Voltage tolerance ..... ±2% (max.)
Overload protection ..... 105%~135% shut off, re-power on to recover
Over voltage protection ..... 110%~167% rated output voltage
Withstand voltage ..... I/P-O/P: 1.5kVAC, I/P-FG: 1.5kVAC, 1 minute
Working temperature ..... -20°C ~ +60°C (refer to output derating curve)
Safety standards ..... Meet LVD, EN60950-1 CB approved by TUV (D type only)
EMC standards ..... EN55022 class B, EN61000-4-2,3,4,6,8, ENV50204
Packing ..... 1.1kg ; 12pcs / 14.4kg / 0.92CUFT

Model No.	Input	Output	R&N	Effi.
SD-350B-5	19~36V	5V, 0~57.0A	100mV	74%
SD-350B-12	19~36V	12V, 0~27.5A	120mV	80%
SD-350B-24	19~36V	24V, 0~14.6A	150mV	80%
SD-350B-48	19~36V	48V, 0~7.30A	200mV	84%
SD-350C-5	36~72V	5V, 0~60.0A	100mV	76%
SD-350C-12	36~72V	12V, 0~27.5A	120mV	81%
SD-350C-24	36~72V	24V, 0~14.6A	150mV	81%
SD-350C-48	36~72V	48V, 0~7.30A	200mV	82%
SD-350D-5	72~144V	5V, 0~60.0A	100mV	78%
SD-350D-12	72~144V	12V, 0~29.2A	120mV	83%
SD-350D-24	72~144V	24V, 0~14.6A	150mV	87%
SD-350D-48	72~144V	48V, 0~7.30A	200mV	89%

DC/DC Converter

500~1000W Enclosed Single Output

500W Single Output DC-DC Converter

CASE: 912A 215x 115x 50 mm

- 4:1 & 2:1 DC input range
- DC input active surge current limiting
- Protections: Short circuit / Overload / Over voltage / Over temp./ Input polarity
- 2000VAC I/O Isolation
- Forced air cooling by built-in DC fan with fan speed control function
- Output OK signal
- Built-in remote ON-OFF control
- Built-in remote sense function
- 3 years warranty

DC adjustment range ..... 12V: 11~15V, 24V: 23~30V, 48V: 46~60V
Line regulation ..... ±0.5% (max.)
Load regulation ..... ±0.5% (max.)
Overload protection ..... 105%~125% constant current limiting, shut off after 5 sec., AC recycle to re-start
Over voltage protection ..... 130%~160% rated output voltage
Withstand voltage ..... I/P-O/P: 2kV, I/P-FG: 1.5kV, 1 minute
Isolation resistance ..... 100MΩ(min.) @500VDC
Working temperature ..... -20°C ~ +60°C (refer to output derating curve)
Safety standards ..... IEC60950-1 CB approved by TUV
EMC standards ..... EN55022 class B, EN61000-4-2,3,4,6,8, ENV50204
Packing ..... 1.15kg ; 12pcs / 14.8kg / 0.92CUFT

Model No.	Input	Output	R&N	Effi.
SD-500L-12	19~72V	12V, 0~40A	150mV	86%
SD-500L-24	19~72V	24V, 0~21A	150mV	88%
SD-500L-48	19~72V	48V, 0~10.5A	150mV	89%
SD-500H-12	72~144V	12V, 0~40A	150mV	87%
SD-500H-24	72~144V	24V, 0~21A	150mV	89%
SD-500H-48	72~144V	48V, 0~10.5A	150mV	90%

1000W Single Output DC-DC Converter

CASE: 952B 295x 127x 41 mm

- 4:1 & 2:1 wide input range
- 2000VAC I/O Isolation
- Protections: Short circuit / Overload / Over voltage / Over temp.
- Forced air cooling by built-in DC fan
- High power density 10.7W/inch^3
- 1U low profile 41mm
- Output OK signal
- 12V / 0.25A auxiliary output
- Built-in remote ON/OFF control
- Built-in remote sense function
- 3 years warranty

DC adjustment range ..... 12V: 11~15V, 24V: 23~30V, 48V: 46~60V
Line regulation ..... ±0.5% (max.)
Load regulation ..... ±0.5% (max.)
Overload protection ..... 105%~125% constant current limiting, shut off after 5 sec., AC recycle to re-start
Over voltage protection ..... 130%~160% rated output voltage
Withstand voltage ..... I/P-O/P: 2kV, I/P-FG: 1.5kV, 1 minute
Isolation resistance ..... 100MΩ(min.) @500VDC
Working temperature ..... -20°C ~ +60°C (refer to output derating curve)
Safety standards ..... IEC60950-1 CB approved by TUV
EMC standards ..... EN55022 class B, EN61000-4-2,3,4,6,8, ENV50204
Packing ..... 1.94kg ; 6pcs / 12.6kg / 0.99CUFT

Model No.	Input	Output	R&N	Effi.
SD-1000L-12	19~72V	12V, 0~60A	150mV	84%
SD-1000L-24	19~72V	24V, 0~40A	150mV	88%
SD-1000L-48	19~72V	48V, 0~21A	150mV	90%
SD-1000H-12	72~144V	12V, 0~60A	150mV	85%
SD-1000H-24	72~144V	24V, 0~40A	150mV	89%
SD-1000H-48	72~144V	48V, 0~21A	150mV	92%

❖ For DC/DC converters, derating may be needed under low input voltage, please check the specification sheet for details.

300W High Efficiency LED Power Supply

Under Development

- Universal AC input / Full range (up to 305VAC)
- Built-in active PFC function, PF > 0.9 for 65% of load or higher
- IP67 / IP65 design
- High efficiency up to 94%
- Adjustable output voltage and current level
- Cooling by free air convection
- Protections: Short circuit / Overload / Over voltage / Over temperature
- Optional models:

  A-Type: IP65 rated. Output and constant current level can be adjusted through internal potential meter

  B-Type: IP67 rated and constant current level adjustable through output cable (optional)

  C-Type: Terminal block for I/O connection (optional)

  Blank-Type: IP67 rated, cable for I/O connection (optional)
- DC output:

  12V / 15V / 20V / 24V / 30V / 36V / 42V / 48V / 54V
- Suitable for LED lighting and street lighting applications
- Dimension (LxWxH): 244.2x 68x 38.8mm
- 3 years warranty

Best products also need best service.
We have authorized distributors all over the world. They have sufficient stock for your prompt delivery. Also they can offer you technical support & RMA services. Please contact your local distributors for more product information. You can also contact us at info@meanwell.com for information of your local distributors.

DC/AC Inverter

100~2500W Modified Sine Wave

▲ 100W (Built-in USB)
170mmx 65ø

▲ 150W / 110V
122x 73x 45 mm

▲ 600W
210x 173x 65 mm

▲ 1500W
455x 210x 85 mm

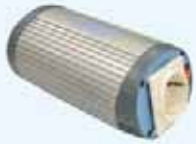

▲ 150W / 230V
165x 94x 69 mm

▲ 300W
165x 88x 74 mm

▲ 1000W
320x 210x 85 mm

▲ 2500W
430x 210x 159 mm

Features

- High frequency design
- Input protections:
  Reverse polarity /
  Over and under voltage /
  Battery low alarm and shutdown
- Output protections:
  Short circuit / Overload / Over temp.
- With power ON/OFF switch and LED indicator
- Built-in remote ON/OFF control for 1000~2500W (optional)
- Built-in USB interface and without fan for 100W
- Input and output fully isolation
- Low power consumption (standby)
- LVD meet EN60950-1 and e13 mark
- EMC meet EN61000-4-2,3, EN55022
- 1 year warranty

Output Socket (option)

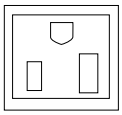	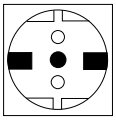	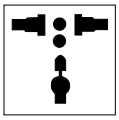
TYPE-2	TYPE-3	TYPE-4
USA	EUROPE	UNIVERSAL

◄Please consult Mean Well for other kinds of optional output socket.

e 13 CE

General Specification (Please refer to www.meanwell.com for detail spec.)

Model Name	A301	A302
DC input rated voltage	12.5VDC	25.0VDC
AC output voltage / Frequency	110VAC(rms) / 60Hz or 230VAC(rms) / 50Hz	
Max. output power	100W, 150W, 300W, 600W, 1000W, 1500W, 2500W	
USB output power	5Vdc / 500mA (100W only)	
AC output regulation	±10% of rated output voltage	
Bat. low alarm	10±0.5VDC	20.5±1.0VDC
Bat. low shut down	9.5±0.5VDC	19.5±1.0VDC
I/P over voltage protection	15~17VDC	30~32VDC
Working temperature	0~30°C (0~25°C for 2500W)	
LVD	Compliance to EN60950-1	
EMC	Compliance to EN55014-1, EN61000-3-2,3, EN61000-4-2,4,5,6,11	

100W

Model Name	Continue power	Input VDC	Output VAC / Hz	Output socket	Effi.
A301-100-F3	100W	10-15	230 / 50	TYPE-3	90%
A302-100-F3	100W	21-30	230 / 50	TYPE-3	90%

150W

Model Name	Continue power	Input VDC	Output VAC / Hz	Output socket	Effi.
A301-150-B2	150W	10-15	110 / 60	TYPE-2	78%
A301-150-F3	150W	10-15	230 / 50	TYPE-3	78%
A302-150-B2	150W	21-30	110 / 60	TYPE-2	82%
A302-150-F3	150W	21-30	230 / 50	TYPE-3	82%

300W

Model Name	Continue power	Input VDC	Output VAC / Hz	Output socket	Effi.
A301-300-B2	300W	10-15	110 / 60	TYPE-2	82%
A301-300-F3	300W	10-15	230 / 50	TYPE-3	82%
A302-300-B2	300W	21-30	110 / 60	TYPE-2	85%
A302-300-F3	300W	21-30	230 / 50	TYPE-3	85%

600W

Model Name	Continue power	Input VDC	Output VAC / Hz	Output socket	Effi.
A301-600-B2	600W	10-15	110 / 60	TYPE-2	82%
A301-600-F3	600W	10-15	230 / 50	TYPE-3	82%
A302-600-B2	600W	21-30	110 / 60	TYPE-2	85%
A302-600-F3	600W	21-30	230 / 50	TYPE-3	85%

1000W

Model Name	Continue power	Input VDC	Output VAC / Hz	Output socket	Effi.
A301-1K0-B2	1000W	10-15	110 / 60	TYPE-2	82%
A301-1K0-F3	1000W	10-15	230 / 50	TYPE-3	82%
A302-1K0-B2	1000W	21-30	110 / 60	TYPE-2	85%
A302-1K0-F3	1000W	21-30	230 / 50	TYPE-3	85%

1500W

Model Name	Continue power	Input VDC	Output VAC / Hz	Output socket	Effi.
A301-1K7-B2	1500W	10-15	110 / 60	TYPE-2	82%
A301-1K7-F3	1500W	10-15	230 / 50	TYPE-3	82%
A302-1K7-B2	1500W	21-30	110 / 60	TYPE-2	85%
A302-1K7-F3	1500W	21-30	230 / 50	TYPE-3	85%

2500W

Model Name	Continue power	Input VDC	Output VAC / Hz	Output socket	Effi.
A301-2K5-B4	2500W	10-15	110 / 60	TYPE-4	82%
A301-2K5-F3	2500W	10-15	230 / 50	TYPE-3	82%
A302-2K5-B4	2500W	21-30	110 / 60	TYPE-4	85%
A302-2K5-F3	2500W	21-30	230 / 50	TYPE-3	85%

DC/AC Inverter

200~700W True Sine Wave

▲ TS-200 205x 158x 59 mm ▲ TS-400 205x 158x 67 mm ▲ TS-700 295x 184x 70 mm

Features

- True sine wave output (THD<3%)
- 2 times high surge power for motor related application
- Advanced digital control by microprocessor
- Output voltage / frequency adjustable
- High efficiency up to 91%
- Standby saving mode to conserve energy (TS-700)
- Built-in fan ON/OFF control function (TS-400/700)
- Fanless design, cooling by free air convection (TS-200)
- Front panel indicator for load / battery / operation status
- High frequency design
- Input protections:
  Bat. low alarm / Bat. low shutdown / reverse polarity / over voltage
- Output protections:
  Short circuit / Overload / Over temperature
- Applications:
  Home appliance, power tools, office and portable equipment, vehicle and yacht...etc.
- 2 years warranty

General Specification (Please refer to www.meanwell.com for detail spec.)

Model Name		TS-200	TS-400	TS-700
Rated output power		200W	400W	700W
Maximum output power		230W for 3 minutes; 300W for 10 sec.	460W for 3 minutes; 600W for 10 sec.	800W for 3 minutes; 1050W for 10 sec.
Output surge rating (30 cycles.)		400W	800W	1400W
DC input rated voltage		12VDC, 24VDC or 48VDC		
AC output voltage		100 / 110 / 115 / 120VAC; 200 / 220 / 230 / 240VAC selectable by setting button		
Output frequency		50Hz / 60Hz selectable by setting button		
AC output waveform		True sine wave, THD<3.0%		
AC output regulation		±3% of rated output voltage		
No load dissipation		-----		≤ 6W @ standby saving mode
Working temperature		-10~+35°C@100% load, 60°C@50% load	-10~+40°C@100% load, 60°C@50% load	0~+40°C@100% load, 60°C@50% load
Safety standards	110V	design refer to UL458		
	230V	Compliance to EN60950-1		
EMC standards	110V	Compliance to FCC class A		
	230V	Compliance to EN55022 class A, E-Mark, EN61000-4-2,3,8, ENV50204		

200W

Model Name	Continue power	Input VDC	Output VAC / Hz	Output socket	Effi.
TS-200-112A	200W	10.5-15	110 / 60	TYPE-A	86.0%
TS-200-124A	200W	21.0-30	110 / 60	TYPE-A	87.5%
TS-200-148A	200W	42.0-60	110 / 60	TYPE-A	88.0%
TS-200-212B	200W	10.5-15	230 / 50	TYPE-B	86.0%
TS-200-224B	200W	21.0-30	230 / 50	TYPE-B	87.5%
TS-200-248B	200W	42.0-60	230 / 50	TYPE-B	88.0%

□= A, B (standard model), C, D, E or F (optional model)

400W

Model Name	Continue power	Input VDC	Output VAC / Hz	Output socket	Effi.
TS-400-112A	400W	10.5-15	110 / 60	TYPE-A	84.5%
TS-400-124A	400W	21.0-30	110 / 60	TYPE-A	86.0%
TS-400-148A	400W	42.0-60	110 / 60	TYPE-A	87.0%
TS-400-212B	400W	10.5-15	230 / 50	TYPE-B	86.0%
TS-400-224B	400W	21.0-30	230 / 50	TYPE-B	87.5%
TS-400-248B	400W	42.0-60	230 / 50	TYPE-B	88.5%

□= A, B (standard model), C, D, E or F (optional model)

700W

Model Name	Continue power	Input VDC	Output VAC / Hz	Output socket	Effi.
TS-700-112A	700W	10.5-15	110 / 60	TYPE-A	86%
TS-700-124A	700W	21.0-30	110 / 60	TYPE-A	88%
TS-700-148A	700W	42.0-60	110 / 60	TYPE-A	89%
TS-700-212B	700W	10.5-15	230 / 50	TYPE-B	89%
TS-700-224B	700W	21.0-30	230 / 50	TYPE-B	90%
TS-700-248B	700W	42.0-60	230 / 50	TYPE-B	91%

□= A, B (standard model), C, D, E or F (optional model)

AC Output Receptacle (optional for TN/TS series)

TYPE-A	TYPE-B	TYPE-C	TYPE-D	TYPE-E	TYPE-F
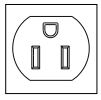	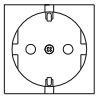			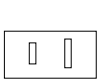	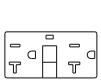
USA	Europe	Australia	U.K.	Japan	GFCI

▲ Please consult Mean Well for other kinds of optional output socket.

DC/AC Inverter

1000~3000W True Sine Wave

▲ TS-1000 345x 184x 70 mm

▲ TS-1500 420x 220x 88 mm

▲ TS-2200 / 3000 474x 283x 98 mm

Features

- True sine wave output (THD<3%)
- 2 times high surge power for motor related application
- Advanced digital control by microprocessor
- High efficiency up to 93%
- Standby saving mode to conserve energy
- Built-in fan ON/OFF control function
- Output voltage / frequency adjustable
- Front panel indicator for load / battery / operation status
- High frequency design
- Input protections:
  Bat. low alarm / Bat. low shutdown / reverse polarity / over voltage
- Output protections:
  Short circuit / Overload / Over temperature
- Applications:
  Home appliance, power tools, office and portable equipment, vehicle and yacht...etc.
- 2 years warranty

General Specification (Please refer to www.meanwell.com for detail spec.)

Model Name		TS-1000	TS-1500	TS-2200 Under Development	TS-3000 Under Development
Rated output power		1000W	1500W	2200W	3000W
Maximum output power		1150W for 3 minutes; 1500W for 10 sec.	1725W for 3 minutes ; 2250W for 10 sec.	2530W for 3 minutes ; 3300W for 10 sec	3450W for 3 minutes ; 4500W for 10 sec.
Output surge rating (30 cycles.)		2000W	3000W	4400W	6000W
DC input rated voltage		12VDC, 24VDC or 48VDC			
AC output voltage		100 / 110 / 115 / 120VAC or 200 / 220 / 230 / 240VAC selectable by setting button			
Output frequency		50Hz/60Hz selectable by setting button			
AC output waveform		True sine wave, THD<3.0%			
AC output regulation		±3% of rated output voltage			
No load dissipation		≤6W @ standby saving mode	≤18W @ standby saving mode	≤7W @ standby saving mode	
Working temperature		0 ~ +40°C @ 100% load, 60°C @ 50% load			
Safety standards	110V	Compliance to UL458 (except for 48V and only for GFCI receptacle), TS-2200/3000 pending			
	230V	Compliance to EN60950-1			
EMC standards	110V	Compliance to FCC class A			
	230V	Compliance to EN55022 class A, E-Mark, EN61000-4-2,3,8, ENV50204			

1000W

Model Name	Continue power	Input VDC	Output VAC / Hz	Output socket	Effi.
TS-1000-112 A	1000W	10.5-15	110 / 60	TYPE-A	88%
TS-1000-124 A	1000W	21.0-30	110 / 60	TYPE-A	89%
TS-1000-148 A	1000W	42.0-60	110 / 60	TYPE-A	90%
TS-1000-212 B	1000W	10.5-15	230 / 50	TYPE-B	90%
TS-1000-224 B	1000W	21.0-30	230 / 50	TYPE-B	91%
TS-1000-248 B	1000W	42.0-60	230 / 50	TYPE-B	92%

□= A, B (standard model), C, D, E or F (optional model)

1500W

Model Name	Continue power	Input VDC	Output VAC / Hz	Output socket	Effi.
TS-1500-112 A	1500W	10.5-15	110 / 60	TYPE-A	87%
TS-1500-124 A	1500W	21.0-30	110 / 60	TYPE-A	89%
TS-1500-148 A	1500W	42.0-60	110 / 60	TYPE-A	90%
TS-1500-212 B	1500W	10.5-15	230 / 50	TYPE-B	88%
TS-1500-224 B	1500W	21.0-30	230 / 50	TYPE-B	90%
TS-1500-248 B	1500W	42.0-60	230 / 50	TYPE-B	91%

□= A, B (standard model), C, D, E or F (optional model)

2200W

Under Development

Model Name	Continue power	Input VDC	Output VAC / Hz	Output socket	Effi.
TS-2200-112 A	2200W	10.5-15	110 / 60	TYPE-A	87%
TS-2200-124 A	2200W	21.0-30	110 / 60	TYPE-A	89%
TS-2200-148 A	2200W	42.0-60	110 / 60	TYPE-A	90%
TS-2200-212 B	2200W	10.5-15	230 / 50	TYPE-B	88%
TS-2200-224 B	2200W	21.0-30	230 / 50	TYPE-B	90%
TS-2200-248 B	2200W	42.0-60	230 / 50	TYPE-B	93%

□= A, B (standard model), C, D, E or F (optional model)

3000W

Under Development

Model Name	Continue power	Input VDC	Output VAC / Hz	Output socket	Effi.
TS-3000-112 A	2700W	10.5-15	110 / 60	TYPE-A	87%
TS-3000-124 A	3000W	21.0-30	110 / 60	TYPE-A	89%
TS-3000-148 A	3000W	42.0-60	110 / 60	TYPE-A	90%
TS-3000-212 B	3000W	10.5-15	230 / 50	TYPE-B	88%
TS-3000-224 B	3000W	21.0-30	230 / 50	TYPE-B	90%
TS-3000-248 B	3000W	42.0-60	230 / 50	TYPE-B	93%

□= A, B (standard model), C, D, E or F (optional model)

DC/AC Inverter

1500~3000W True Sine Wave Solar Inverter

▲ TN-1500
420x 220x 88 mm

▲ TN-2200 / 3000
474x 283x 98 mm

Features

- True sine wave output (THD<3%)
- 2 times high surge power for motor related application
- Advanced digital control by microprocessor
- High efficiency up to 93%
- Standby saving mode to conserve energy
- Built-in fan ON/OFF control function
- Output voltage / frequency adjustable
- Front panel indicator for load / battery / operation status
- High frequency design
- Selectable UPS and energy saving mode
- AC by pass, built-in AC and solar charger
- Fast transfer time under 10ms
- Solar input current up to 30A max.
- Input protections:
  Bat. low alarm / Bat. low shutdown / reverse polarity / over voltage
- Output protections:
  Short circuit / Overload / Over temperature / AC circuit breaker
- Optional monitoring software
- Applications:
  Home appliance, power tools, office and portable equipment, vehicle and yacht...etc.
- 2 years warranty

General Specification (Please refer to www.meanwell.com for detail spec.)

Model Name		TN-1500	TN-2200 Under Development	TN-3000 Under Development
Rated output power		1500W	2200W	3000W
Maximum output power		1725W for 3 minutes ; 2250W for 10 seconds	2530W for 3 minutes ; 3300W for 10 seconds	3450W for 3 minutes ; 4500W for 10 seconds
Output surge rating (30 cycles.)		3000W	4400W	6000W
DC input rated voltage		12VDC, 24VDC or 48VDC		
AC output voltage		100 / 110 / 115 / 120VAC or 200 / 220 / 230 / 240VAC selectable by setting button		
Output frequency		50Hz/60Hz selectable by setting button		
AC output waveform		True sine wave, THD<3.0%		
AC output regulation		±3% of rated output voltage		
No load dissipation		≤18W @ standby saving mode	≤7W @ standby saving mode	
Transfer time		≤10ms inverter mode ←→ by pass mode		
Working temperature		0 ~ +40°C @ 100% load, 60°C @ 50% load		
Safety standards	110V	Compliance to UL458 (except for 48V and only for GFCI receptacle), TN-2200/3000 pending		
	230V	Compliance to EN60950-1		
EMC standards	110V	Compliance to FCC class A		
	230V	Compliance to EN55022 class B, E-Mark, EN61000-4-2,3,4,5,6,8,11, ENV50204		

1500W (Inverter with AC & Solar Charger)

Model Name	Continue power	Input VDC	Output VAC / Hz	Output socket	Effi.
TN-1500-112 A	1500W	10.5-15	110 / 60	TYPE-A	87%
TN-1500-124 A	1500W	21.0-30	110 / 60	TYPE-A	89%
TN-1500-148 A	1500W	42.0-60	110 / 60	TYPE-A	90%
TN-1500-212 B	1500W	10.5-15	230 / 50	TYPE-B	88%
TN-1500-224 B	1500W	21.0-30	230 / 50	TYPE-B	90%
TN-1500-248 B	1500W	42.0-60	230 / 50	TYPE-B	91%

☐= A, B (standard model), C, D, E or F (optional model)

2200W (Inverter with AC & Solar Charger) Under Development

Model Name	Continue power	Input VDC	Output VAC / Hz	Output socket	Effi.
TN-2200-112 A	2200W	10.5-15	110 / 60	TYPE-A	87%
TN-2200-124 A	2200W	21.0-30	110 / 60	TYPE-A	89%
TN-2200-148 A	2200W	42.0-60	110 / 60	TYPE-A	90%
TN-2200-212 B	2200W	10.5-15	230 / 50	TYPE-B	88%
TN-2200-224 B	2200W	21.0-30	230 / 50	TYPE-B	90%
TN-2200-248 B	2200W	42.0-60	230 / 50	TYPE-B	91%

☐= A, B (standard model), C, D, E or F (optional model)

3000W (Inverter with AC & Solar Charger) Under Development

Model Name	Continue power	Input VDC	Output VAC / Hz	Output socket	Effi.
TN-3000-112 A	2700W	10.5-15	110 / 60	TYPE-A	87%
TN-3000-124 A	3000W	21.0-30	110 / 60	TYPE-A	89%
TN-3000-148 A	3000W	42.0-60	110 / 60	TYPE-A	90%
TN-3000-212 B	2700W	10.5-15	230 / 50	TYPE-B	88%
TN-3000-224 B	3000W	21.0-30	230 / 50	TYPE-B	90%
TN-3000-248 B	3000W	42.0-60	230 / 50	TYPE-B	93%

☐= A, B (standard model), C, D, E or F (optional model)

Case Drawing

901

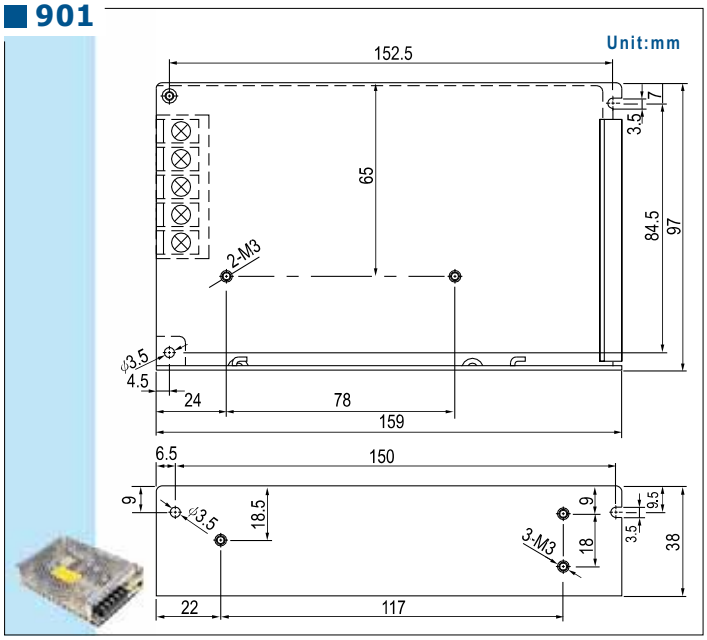

905

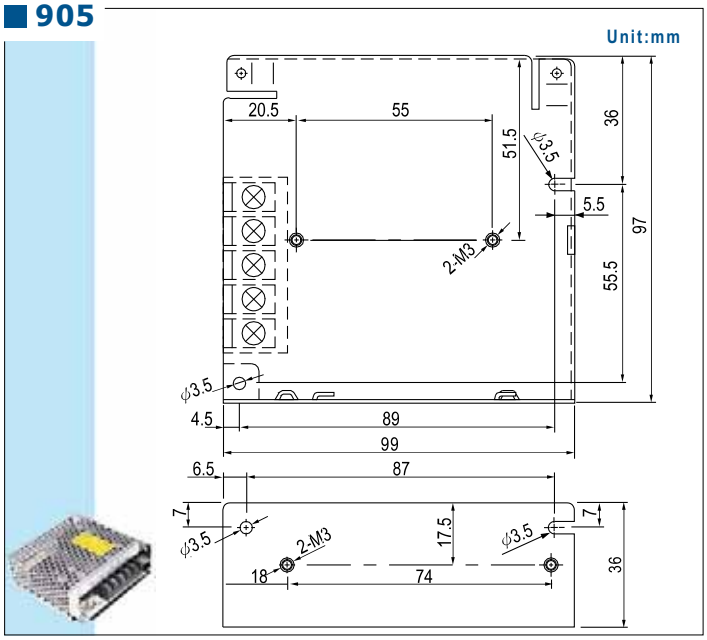

902

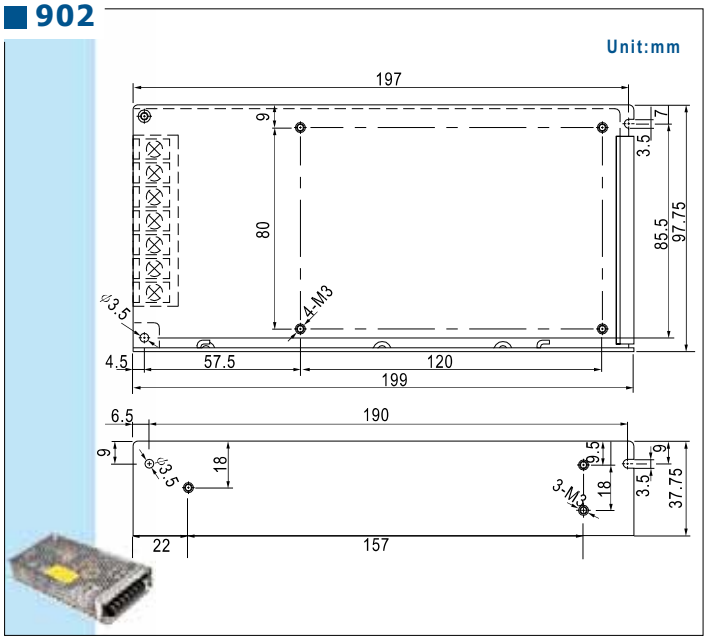

906

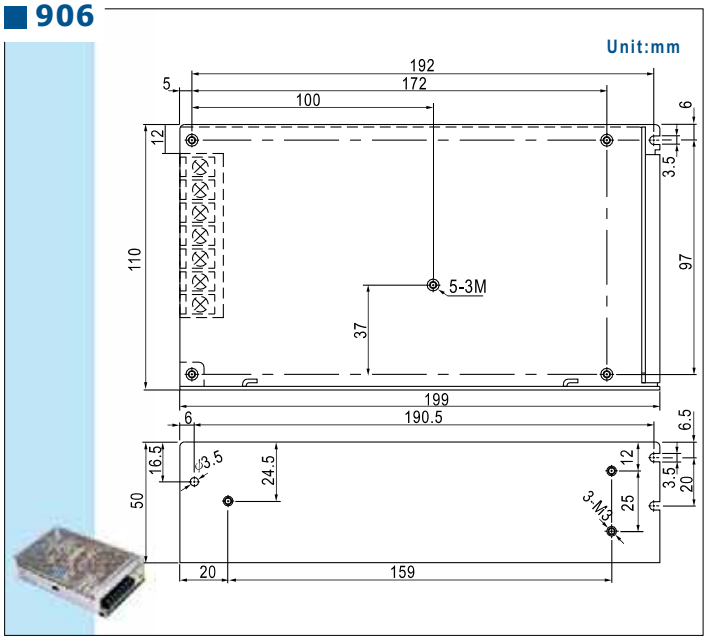

903

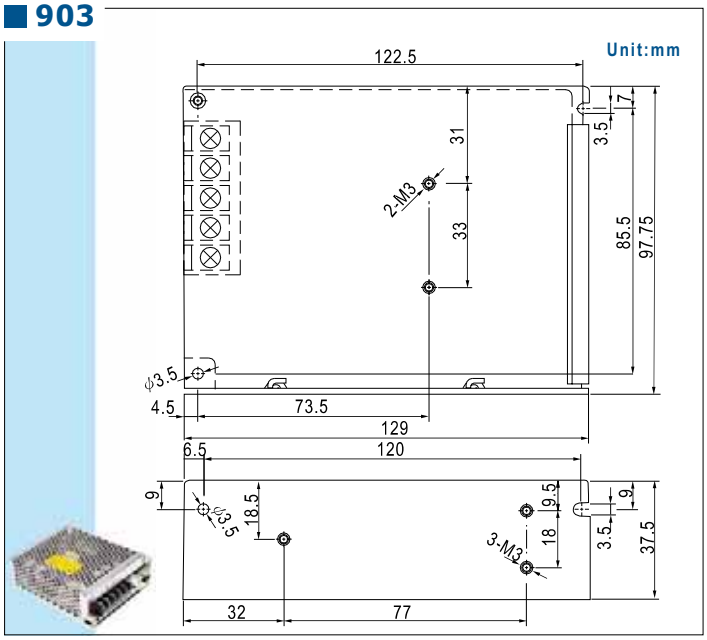

907

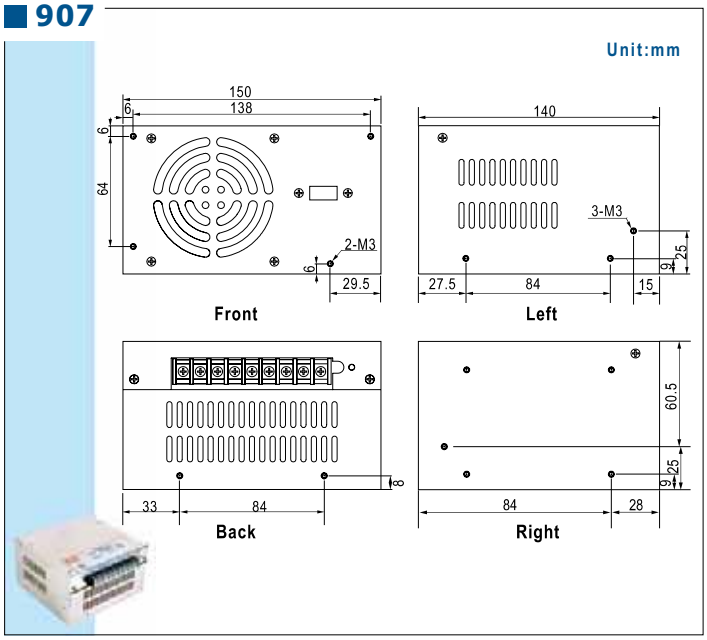

Case Drawing

910

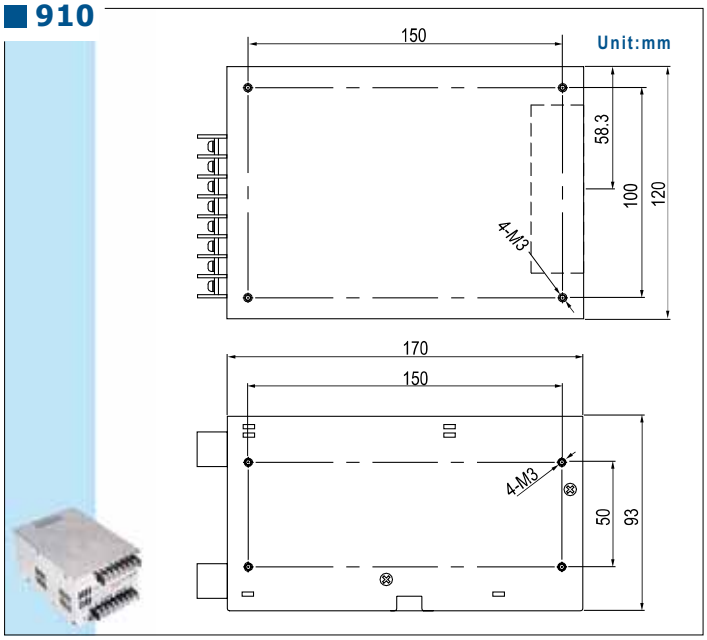

916A
916B

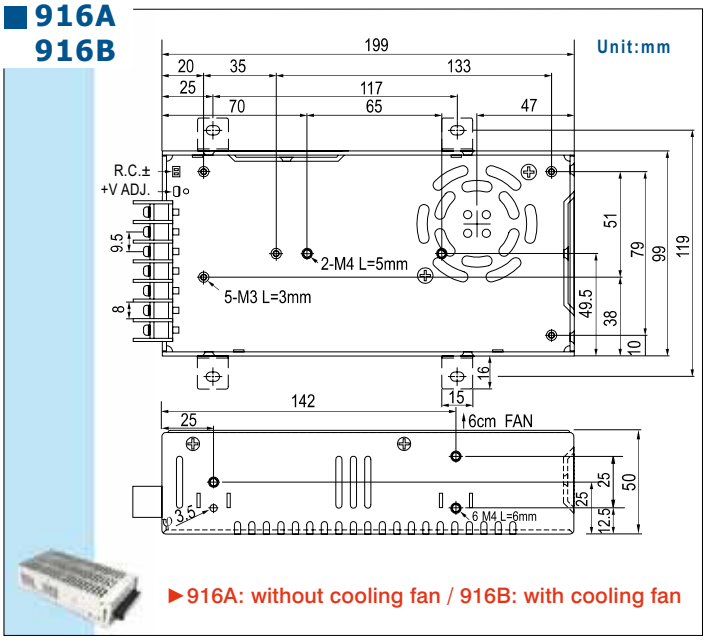

►916A: without cooling fan / 916B: with cooling fan

912
912B

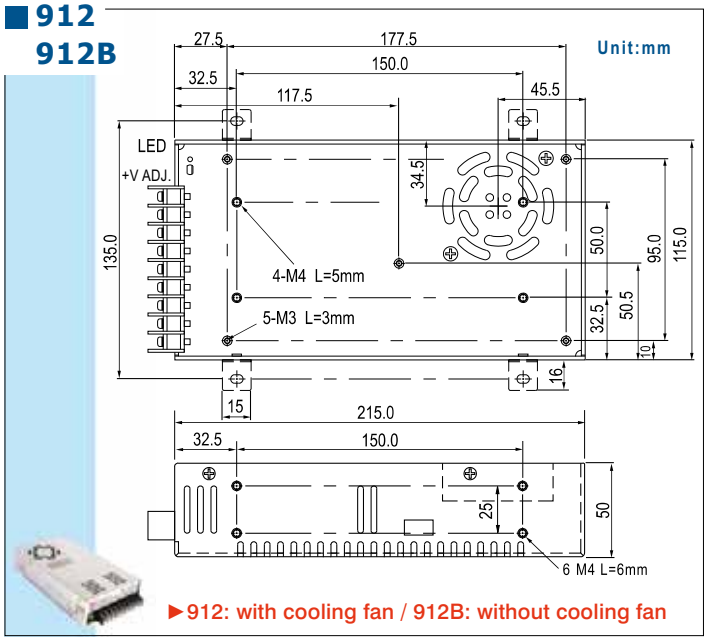

►912: with cooling fan / 912B: without cooling fan

919

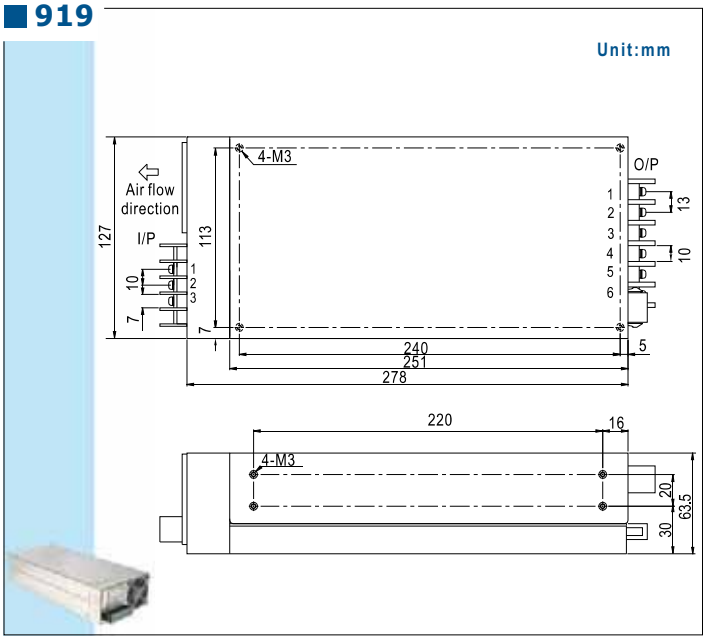

915A

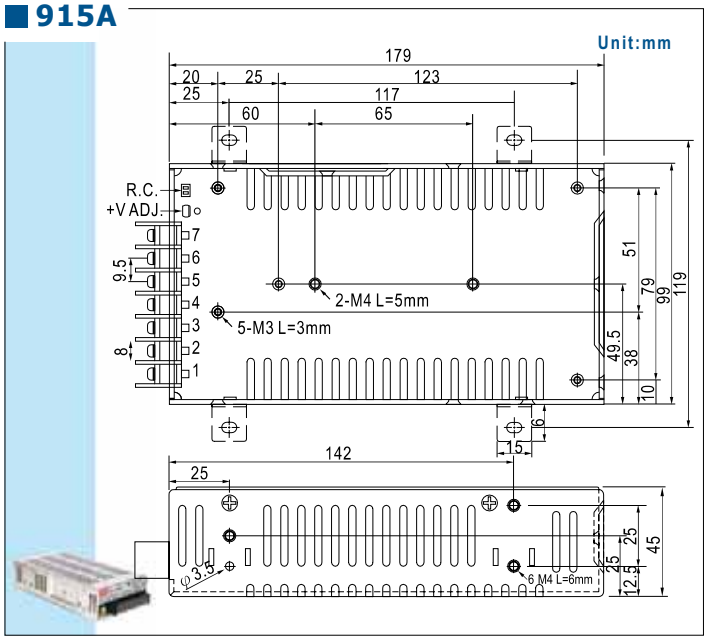

920A

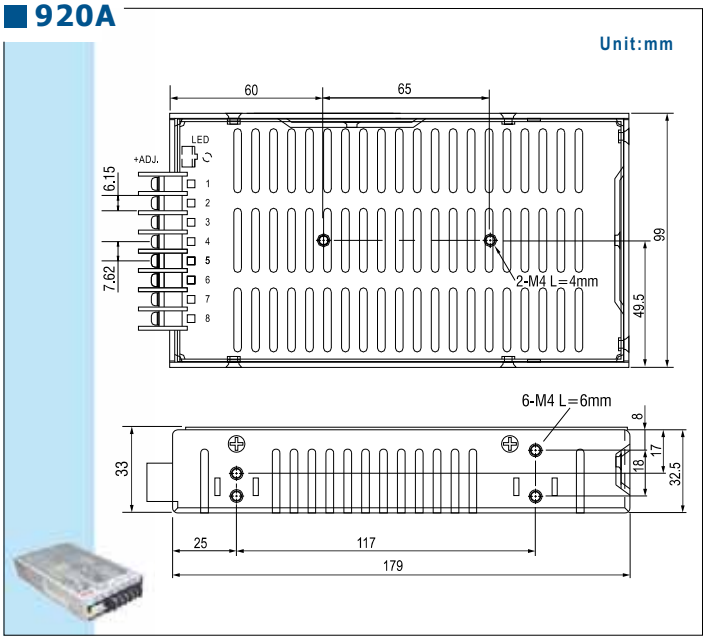

Case Drawing

926

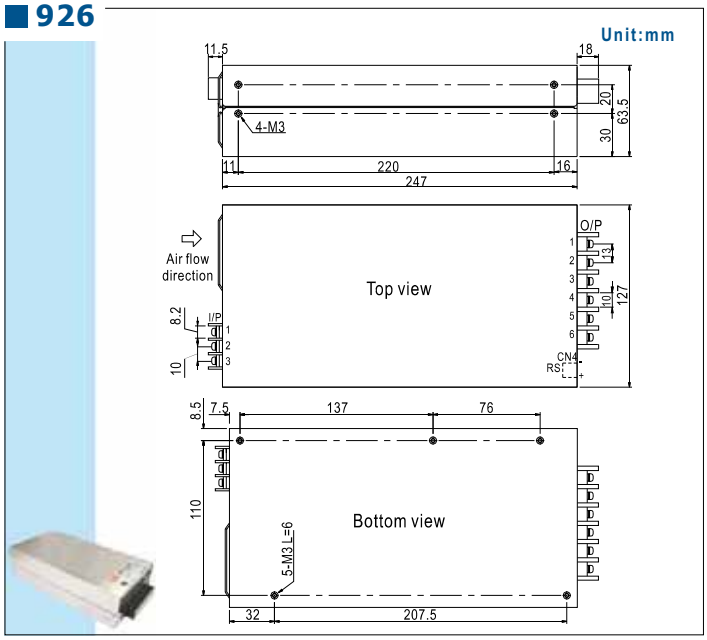

929

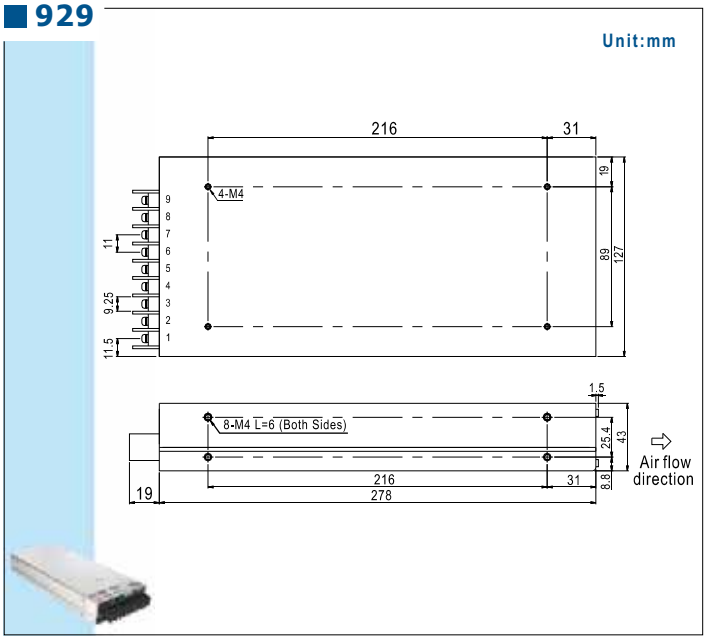

927

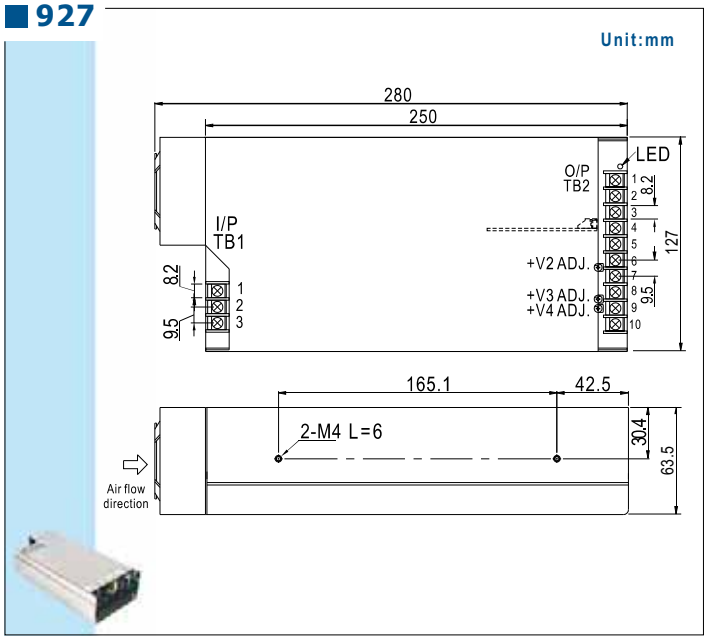

931

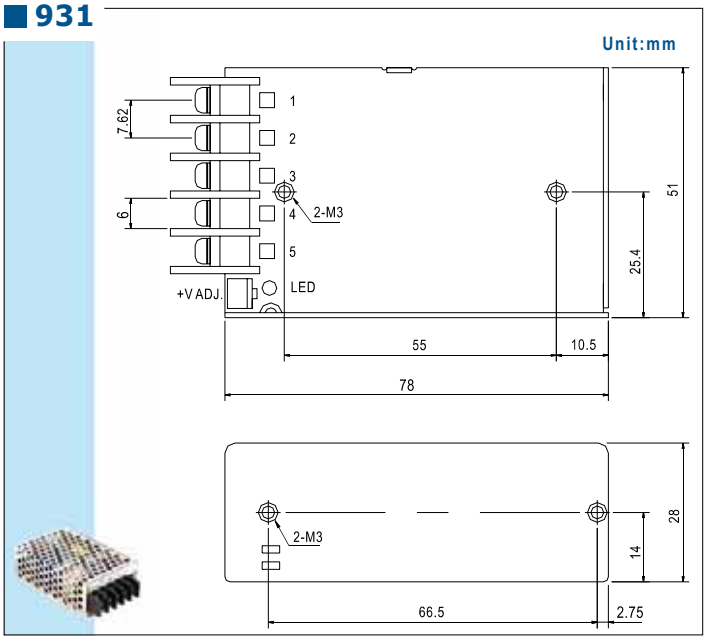

928

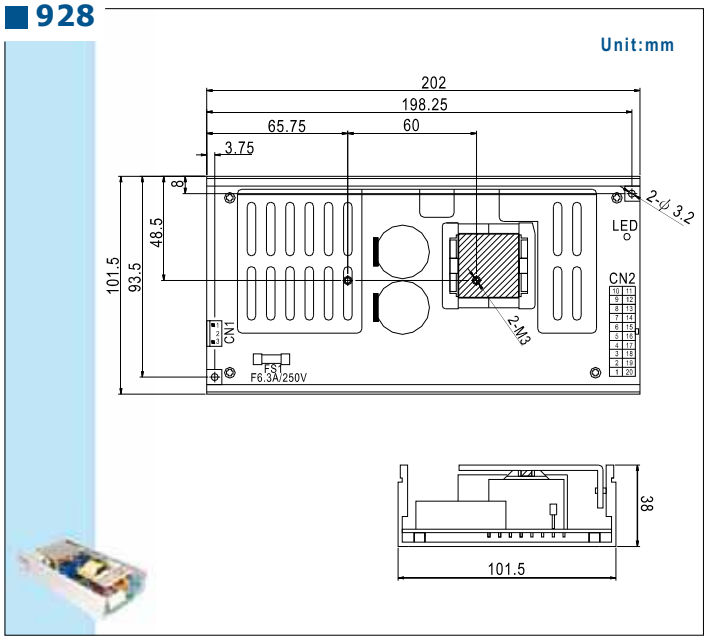

932

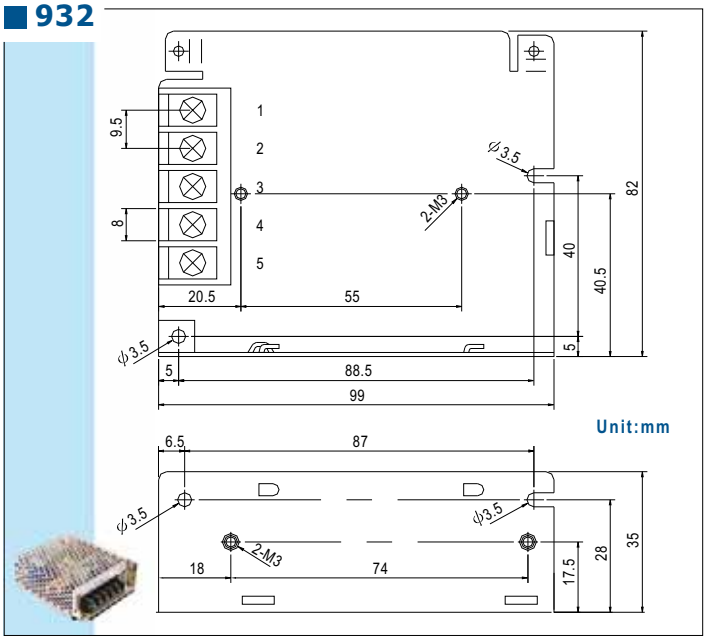

Case Drawing

935

Unit:mm

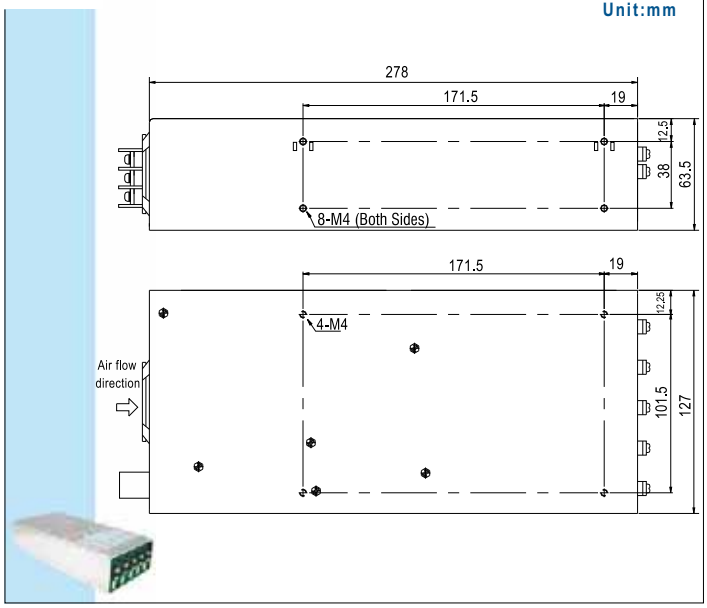

941

Unit:mm

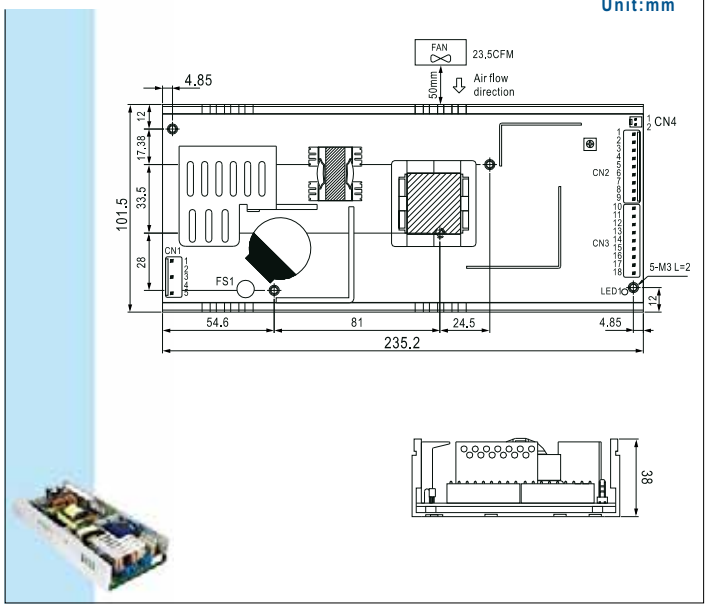

939

Unit:mm

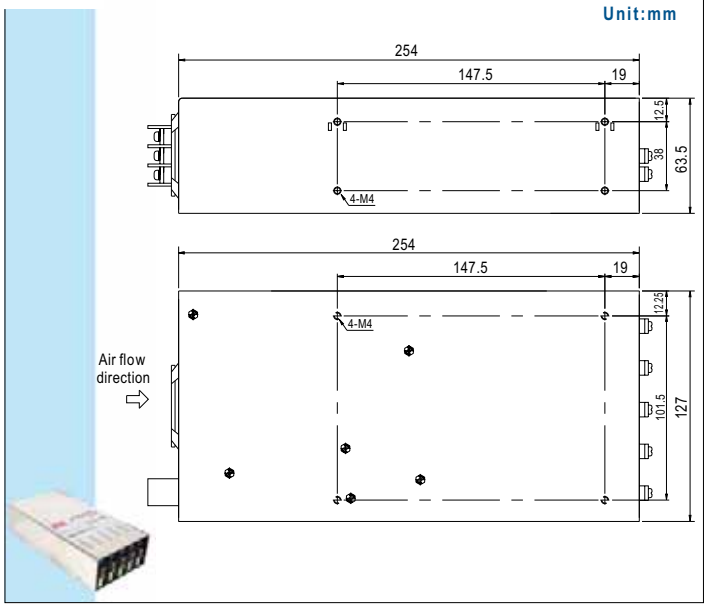

943

Unit:mm

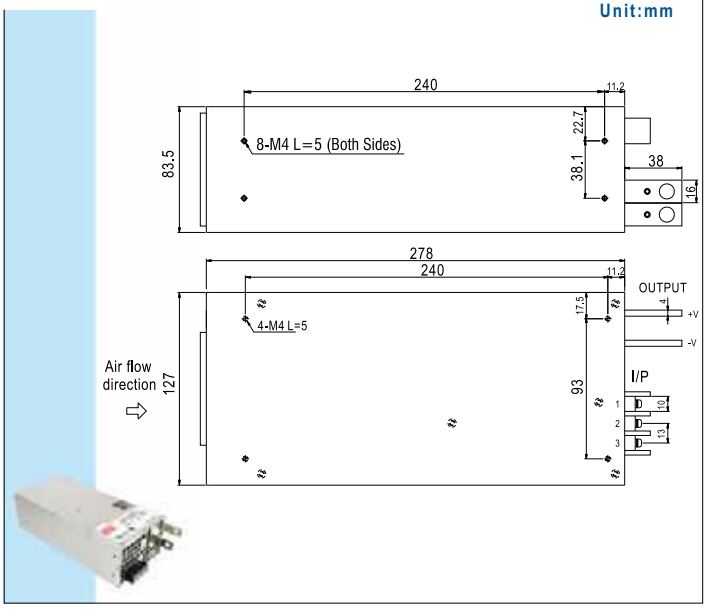

940

Unit:mm

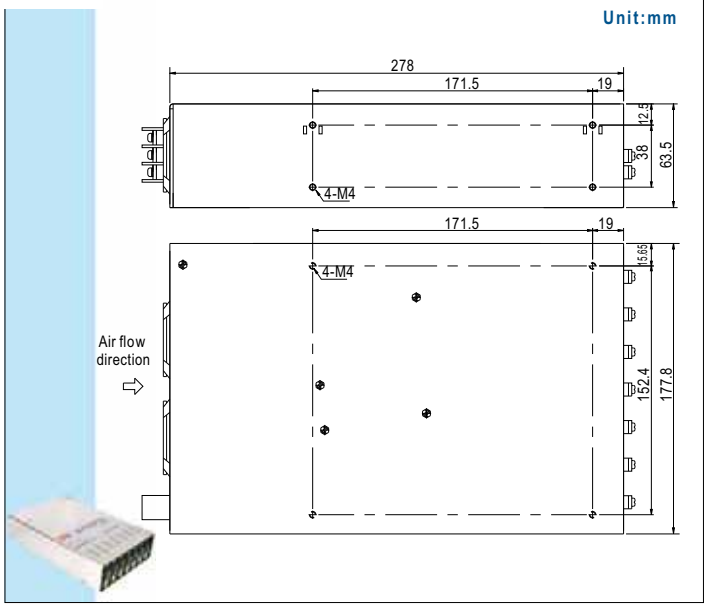

946A

Unit:mm

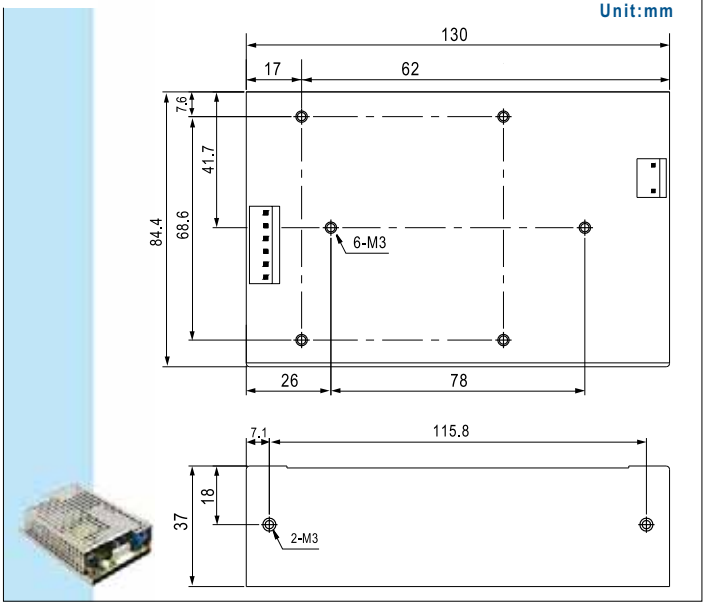

Case Drawing

952B

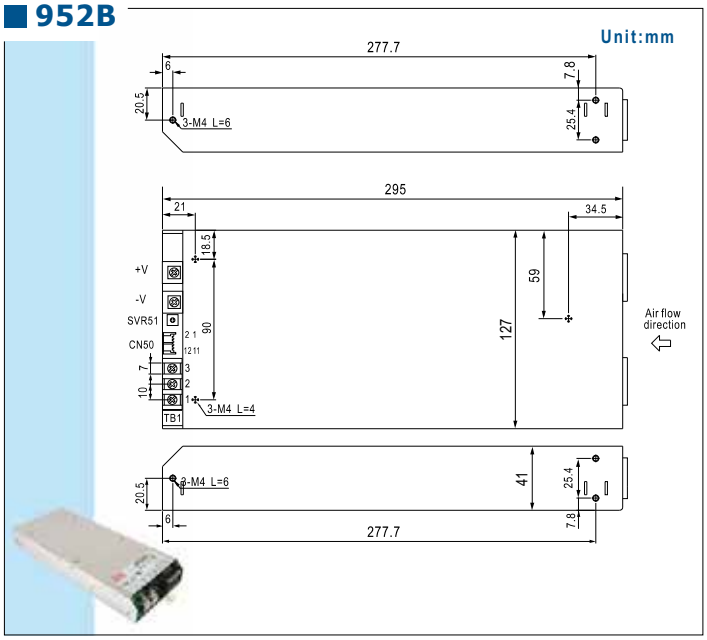

986

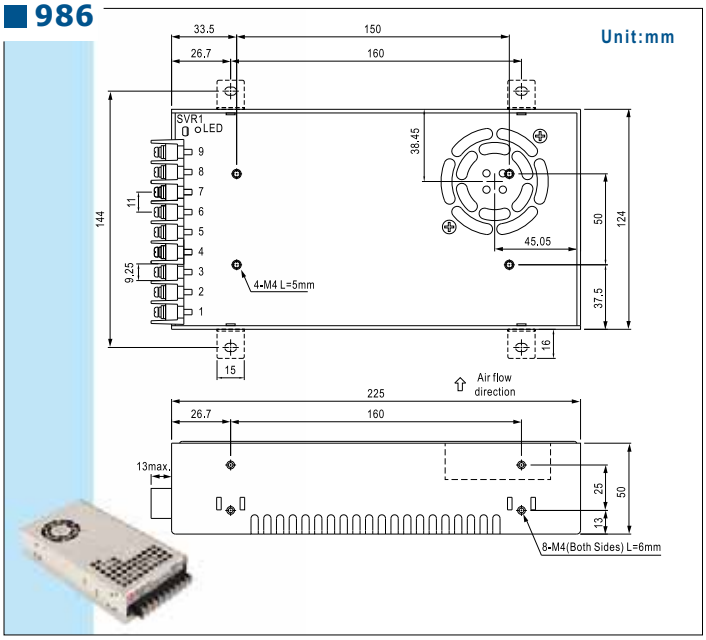

963

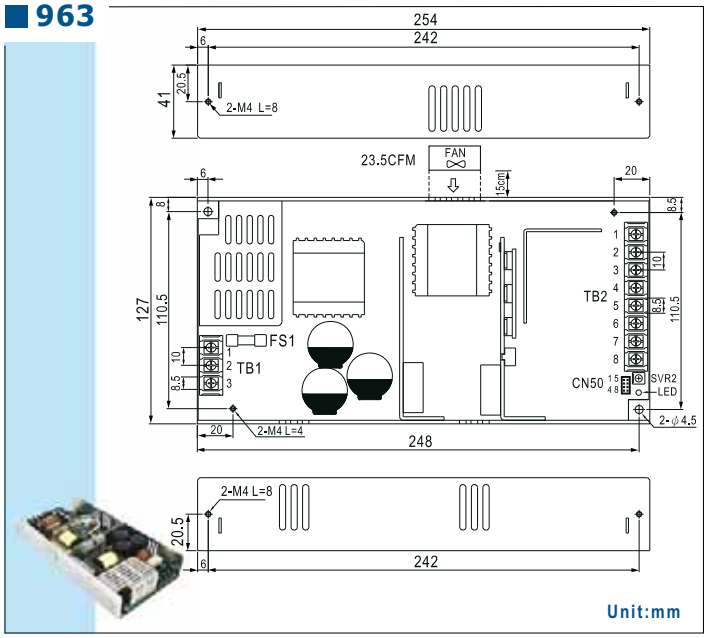

987A

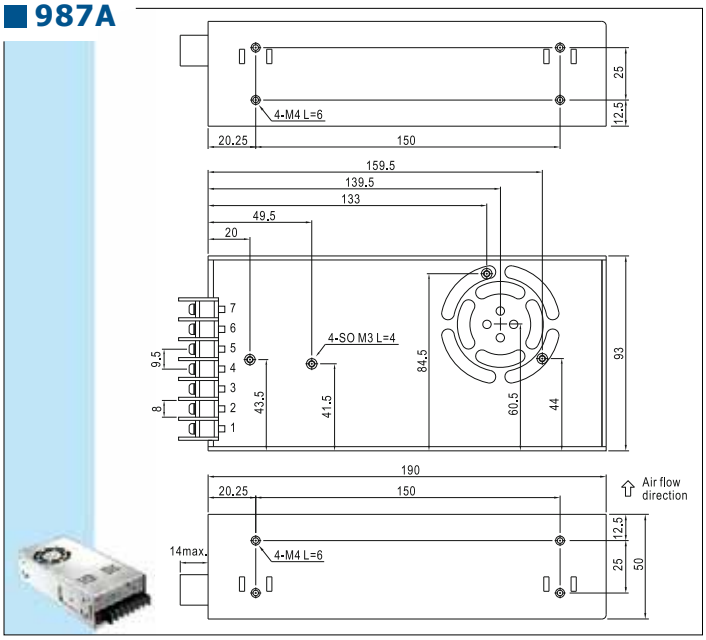

971A

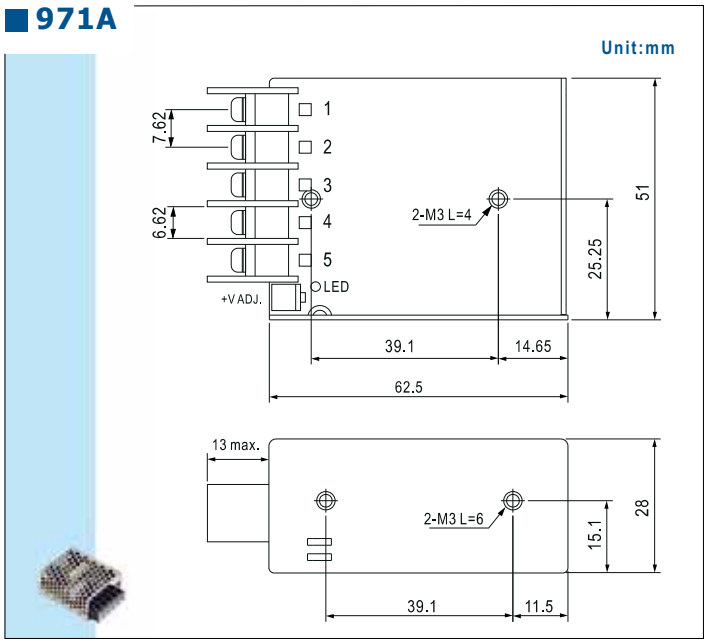

988A

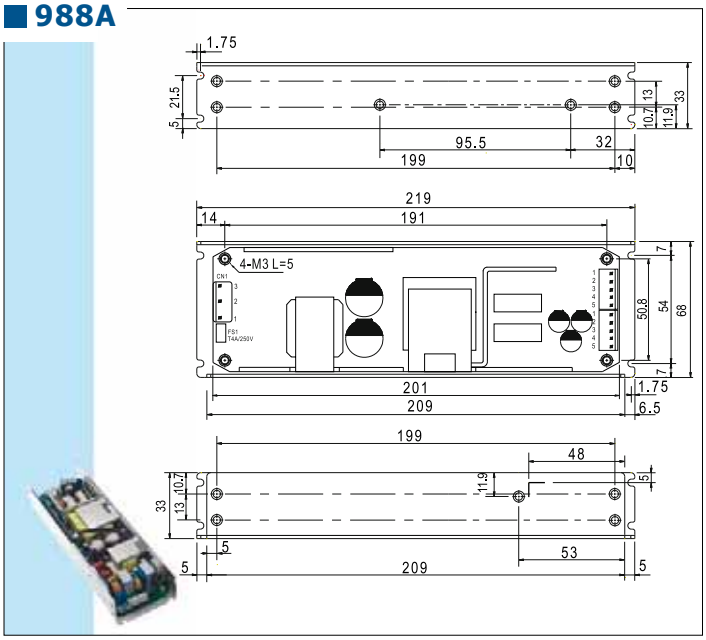

Accessories

DIN Rail Accessories

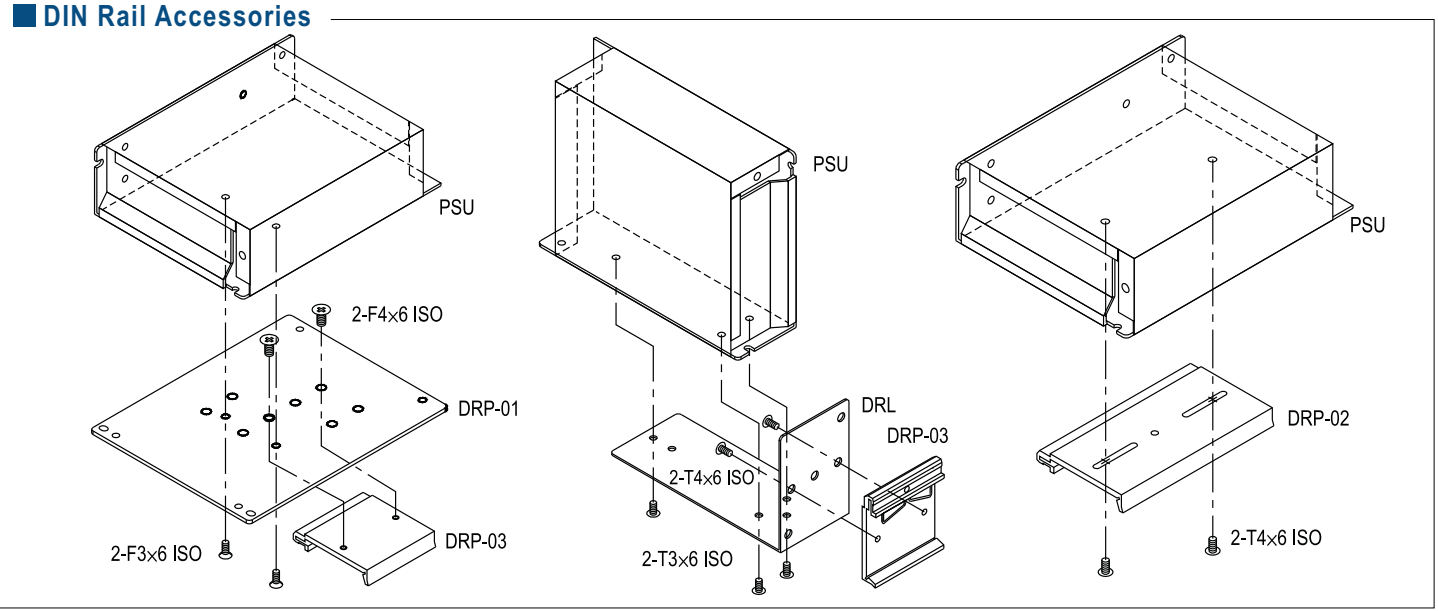

Mounting Accessories

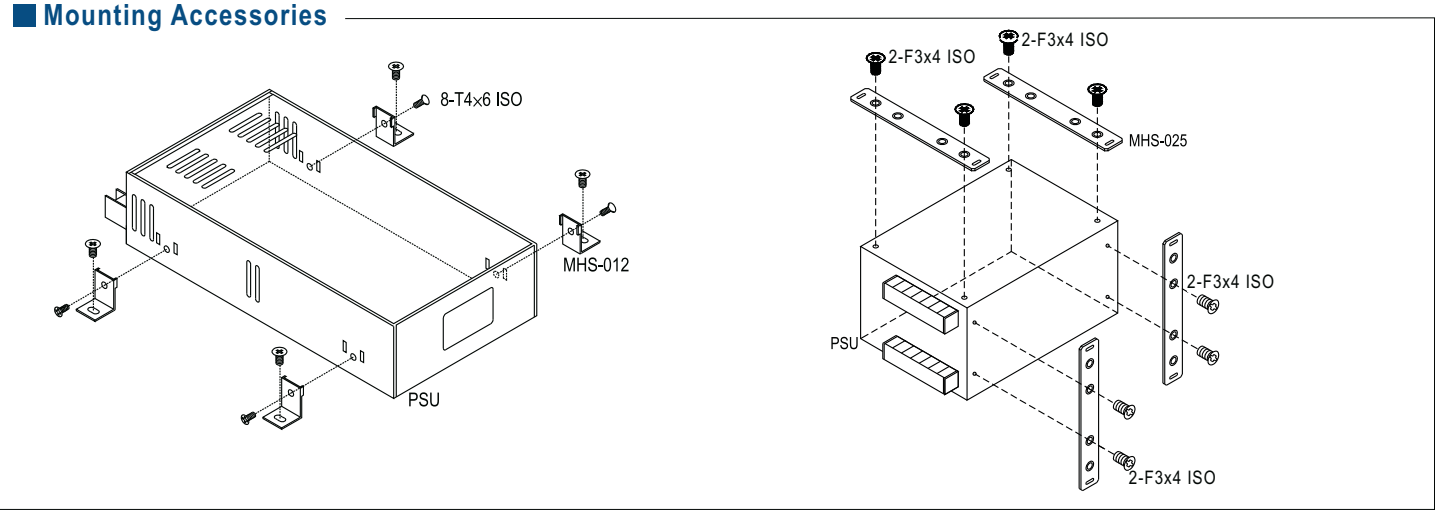

ITEM	Order No.	Case	Model
	DRL-01	903 905 931 932 971	S-40, D-30, T-30, ... S-15, S-25, ... RS-25, NES-15 RS-35, NES-25 RS-15
	DRL-02	901 902 906 915 916 920	S-50, S-60, D-60, ... S-100, S-100F, SD-100, ... S-150, SD-150, D-120, ... SP-100, ... SP-150, SP-200, ... SP-75, ...
	DRL-03	911 912	S-240, ... S-320, SP-320, ...
	DRL-03A	980 987	SP-240, HRP(G)-300
	DRP-01	901, 902 903, 906 912, 931 932	All models
	DRP-02	905 / 915 916 / 920 928	S-15, S-25, ... / SP-100, ... SP-150, SP-200, .. / SP-75, ... USP-225, ...
	DRP-03	DRP-01 DRL-01~03	All models

ITEM	Order No.	Case	Model
	MHS012	912, 915 916, 935 939, 940 977, 980 987	S-201, S-320, S-350, SP-100, SP-150, SP-200,SP-320, SE-1000, MP450/650/1000, SP-240, HRP-300/600
	MHS013	919 926	PSP-500, SP-750, SE-600
	MHS014	952	RSP-1000, SD-1000
	MHS025	910	SP-500, PSP-600.....
	MHS026	943	RSP-1500
NEW Cover for terninal block	TBC-05	901 903 905 932	SD-50 S-40, NES-50, RS-75 S-25, SD-25, NES-35, RS-50 S-60, NES-25, RS-35
	TBC-07	901 902 902A 903 905 906	D/ID-60, NED/T-75, RD-85, NES-100, RS-100, T-60 S-100F, RD-125, NES-150, RS-150, SD-100 HRP-200 NED/T-50, RD/RID-65, T-40 NED/T-35,RD-50 S-150, SC-150, SD-150
	TBC-08	901 906	AD-155, ADD/ADS-155 D/T/Q-120,

Custom-Standard Product List

Want to get a free design?

If you can't find a suitable product from MEAN WELL's product line and your SPEC also can't be modified from any of our standard product, MEAN WELL offers you an opportunity to get the free custom-made design which is called CDM (Cooperate Design Manufacturer). Unlike ODM which can only fulfill the needs of one customer, our CDM products tend to cover the requirements of more customers and hence can boost the production volume and drag down the costs for all the customers.

Following is the list of our under development CDM products, you are welcome to join the design procedure and let the new product fulfill your special requirement. No NRE charge, no safety costs, just contact us in time!!

PAD-100

100W Single Output with Dual Input Source

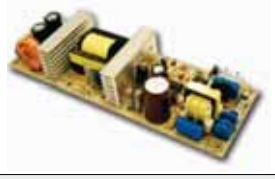

232 x 65 x 38 mm

- Dual input source: 90~264VAC or 36~75VDC
- Built-in PFC function for AC input
- Input mode indicating signal
- LED indicator for power on
- Protections: Short circuit / Overload / Over voltage
- Cooling by free air convection
- DC output: 12V / 24V
- 2 years warranty

PT-320

320W Triple Output with PFC Function

197 x 108 x 37 mm

- Universal AC input / Full range
- Built-in active PFC function, PF>0.92
- Protections: Short circuit / Overload / Over voltage / Over temperature
- Seperate protections for all outputs
- Wide range output voltage adjustment for CH1&2
- No load power consumption <0.75W
- Built-in PS-ON control function
- Design refer to UL60950-1, TUV EN60950-1
- 130% peak load capability for all outputs
- 80% load by free air convection, 100% load with 18CFM forced air
- Working temperature: -20°C~+70°C
- Output models:
  PT-320A - 12V / 0~10A, 24V / 0~6A, 5VSB / 0~5A
  PT-320B - 24V / 0~10A, 48V / 0~6A, 12VSB / 0~5A
- 3 years warranty

SP-400

400W Single Output with PFC Function

225x 124x 50mm

- Universal AC input / Full Range
- Built-in active PFC function
- Protections: Short circuit / Overload / Over voltage / Over temperature
- Built-in constant current limiting circuit
- Forced air cooling by built-in DC fan
- Output models: 3.3V / 5V / 12V / 15V / 24V / 36V / 48V
- 3 years warranty

SPV-600

600W Single Output with PFC & Programmable Output Voltage Function

170x 120x 93 mm

- Output voltage programmable from 20~110% by 1~5.5VDC external control signal
- Universal AC input / full range
- Remote ON/OFF control, remote sense
- DC OK signal output
- Protection: Short circuit / Overload / Over voltage / Over temperature
- DC output models: 12V / 24V / 48V
- Efficiency up to 90%
- Parallel operation function
- 3 years warranty

QP-1000

1000W Quad Output with PFC Function (Low cost substitute of modular power)

278 x 177.8 x 63.5 mm

- Built-in external voltage control function 10~120% for CH3 & CH4
- Universal AC input / Full range
- Built-in active PFC function, PF > 0.95
- Protections: Short circuit / Overload / Over voltage / Over temperature
- Built-in remote ON/OFF control for CH3, CH4, and the whole unit
- Isolated outputs with independent PWM control, no minimum load required
- Built-in remote sense for CH3 & CH4
- Output current monitor signal for CH3 & CH4
- Cooling by built-in DC fan
- DC output:
  12V@8A / 5V@6A / 24V@12.5A / 24V@25A
- Design refer to UL60950-1, TUV EN60950-1
- 3 years warranty

General Information

Quotation

- Most of our standard products are available and in stock through our global authorized distributors. Please contact your local distributor for prompt service. Please let us know if you are unable to find Mean Well's distributor information in your local area.
- Written quotations are valid for 60 days from the date quoted unless otherwise specified. Customers are responsible for all banking related charges outside of Taiwan.

Order

- Orders must be placed to Mean Well by mail, e-mail, or fax. Please do not place your order by phone. For international business, Mean Well will provide order confirmations with scheduled delivery dates. If you fail to receive an order confirmation within 2 working days, please reconfirm your order.
- Minimum order amounts per shipment are determined by our local distributor's stock capability. Please contact our sales representative for details.
- We encourage customers to place long-term orders. However, order cancellations or reschedules must be made 45 days prior to the scheduled shipping date.

Delivery

- For our standard products, Mean Well usually keeps around 2-8 weeks safety stock (based on the past 3 months sales record) for prompt delivery of small / medium quantity orders. For large quantity or new product orders, 3-5 weeks lead-time is needed.

Return

- All returned goods must have a RMA (return material authorization) number marked on each carton. Contact Mean Well for a RMA number. All goods must be shipped as "freight prepaid" unless confirmed by our sales representatives.

Warranty

- Products found to be defective within 30 days from the date of receipt can be returned for credit or exchange. After the initial 30 days, Mean Well will repair the goods according to our warranty period. Contact Mean Well for further information on credit or a RMA number. Goods should be shipped as "freight prepaid" to Mean Well and Mean Well will repair and return the defective units (freight prepaid) within 7 working days. If the warranty period has expired, a repair charge (20% of original purchase price or min. USD 5.00/pc) will be charged.
- If customers do the repair by themselves, Mean Well can provide reasonable quantity of free components for repair purpose.

Attention

- We make every effort to ensure the accuracy of information in the catalog. If there is any discrepancy between the data presented in our catalog and the SPEC, the SPEC sheets should take precedence (please refer to www.meanwell.com for the latest SPEC information). We cannot take any responsibility of any consequence arising due to error or change in specification. We suggest customers conduct a sample test for evaluation and approval before placing a formal order.
- For continuing product improvement, Mean Well reserves the right to revise any information in this catalog without further notification.

The EMC directive applies to component power supplies

- Mean Well ensures that all of the power supplies with CE declaration are designed to meet EMC directives and are verified by an independent certified lab agent with a test report prepared. However, there are 2 categories for power supplies: One is a stand-alone power supply, such as laboratory power supplies which can be tested under EMC individually. The other category is a component power supply such as an enclosed power supply and open PCB power supply. These power supplies are considered a component which will be installed into a final equipment. Since EMC performance is affected by the final installation of a product, Mean Well cannot guarantee that the final equipment will meet EMC directives. Final product manufacturers must re-confirm that their product meets EMC directives.

RoHS Announcement

- To minimize the environmental impact and take more responsibility to the earth we live, MEAN WELL applies manufacturing that complies with Directive 2002/95/EC of the European Parliament - RoHS (Restriction of Hazardous Substances) since Sep. 2005. Please refer to the declaration on our web site for more detail information.